# ELKA

# X 109

X 197

schematic diagrams

# ELKA

## ERRATA CORRIGE — MODEL X109

| Sheet No. | Date | Printed Circuit | MODIFICATIONS | |
|---|---|---|---|---|
| | | | Before | Now |
| 10-12 | 30/09/83 | CST1277 | T17 - T28 = NPN BC 173 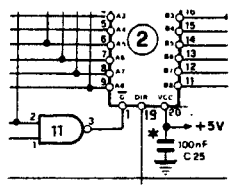 | T17 - T28 = NPN BC 550 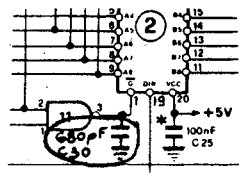 |
| 2/12 | 15/12/83 | CST1269 | | |

*The following modification starts with the instrument having serial number*

*EUROPE*
*AMERICA*

| | Model | Object : | Sheet No A |
|---|---|---|---|
| | X 109 | Inside view of the organ | Date 21-7-82 |

1. 410CST1282 - Decode
2. 410CST0504 - Tuning
3. 410CST1284 - Bass Registers
4. 410CST1287 - Volume and Sustain Potentiometers
5. 410CST1285 - Lower Manual Registers
6. 410CST1289 - Preset Latch
7. 410CST1288 - Preset Switches
8. 410CST1286 - Upper Manual Registers
9. 410CST1339 - Oscillator
10. 410CST1319 - Reverb Amplifier
11. 410CST1271 - Contact Assembly for Upper Keyboard
12. 410CST1405 - Cross Over
13. 410CST1313 - Master Volume Potentiometer
14. 410CST1406 - Mains Filter

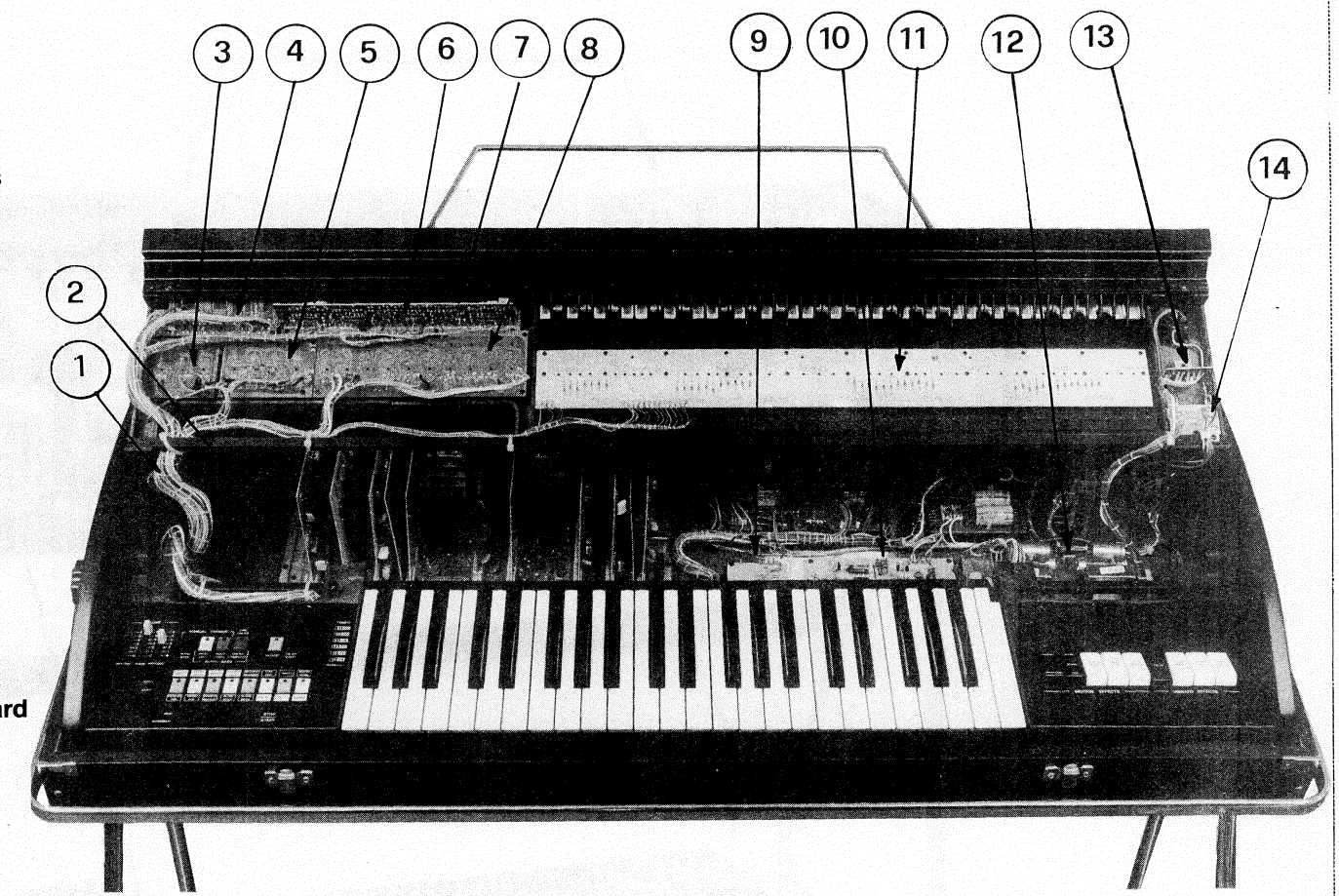


| | Model | Object: | Sheet No B |
|---|---|---|---|
| | X 109 | Inside view of the organ | Date 21-7-82 |

1. 410CST1272 - Motion Effects
2. 410CST1273 - Percussion and Brass
3. 410CST1274 - Upper Filters and Pedal Control
4. 410CST1294 - Shield
5. 410CST1275 - Upper Generator
6. 410CST1295 - Upper Switches and Squelch
7. 410CST1296x6 - Upper Switches
8. 410CST1269 - Microprocessor
9. 410CST1275 - Lower Generator
10. 410CST1297 - Lower Switches and Squelch
11. 410CST1298x5 - Lower Switches
12. 410CST1277 - Rhythm Unit
13. 410CST1278 - Vibrato - Lower and Bass Filters
14. 410CST1294 - Shield
15. 410CST1279 - Solo
16. 410CST1280 - Master Board
17. 410CST1338 - Power Supply
18. 410CST1340 - Amplifier

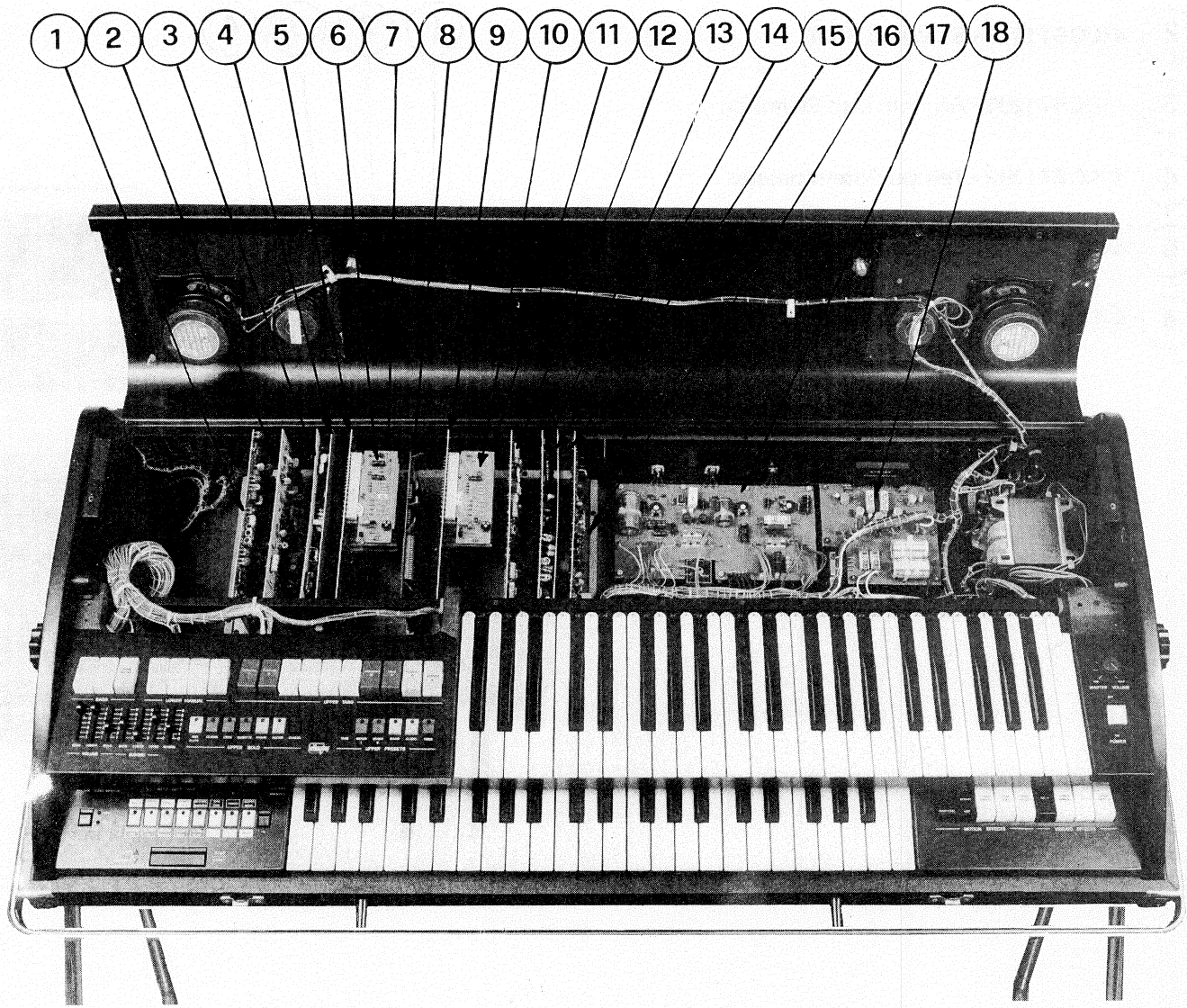


| | Model | Object: | Sheet No. C |
|---|---|---|---|
| | X 109 | Inside view of the organ | Date 21 - 7 - 82 |

1. 410CST1291 - Rhythm Potentiometers
2. 410CST1417 - Stop and Start
3. 410CST1290 - Rhythm Unit Switches
4. 410CST1292 - Tempo Potentiometer
5. 410CST1271 - Contact Assembly for Lower Keyboard
6. 410CST1283 - Motion Effects and Vibrato Registers

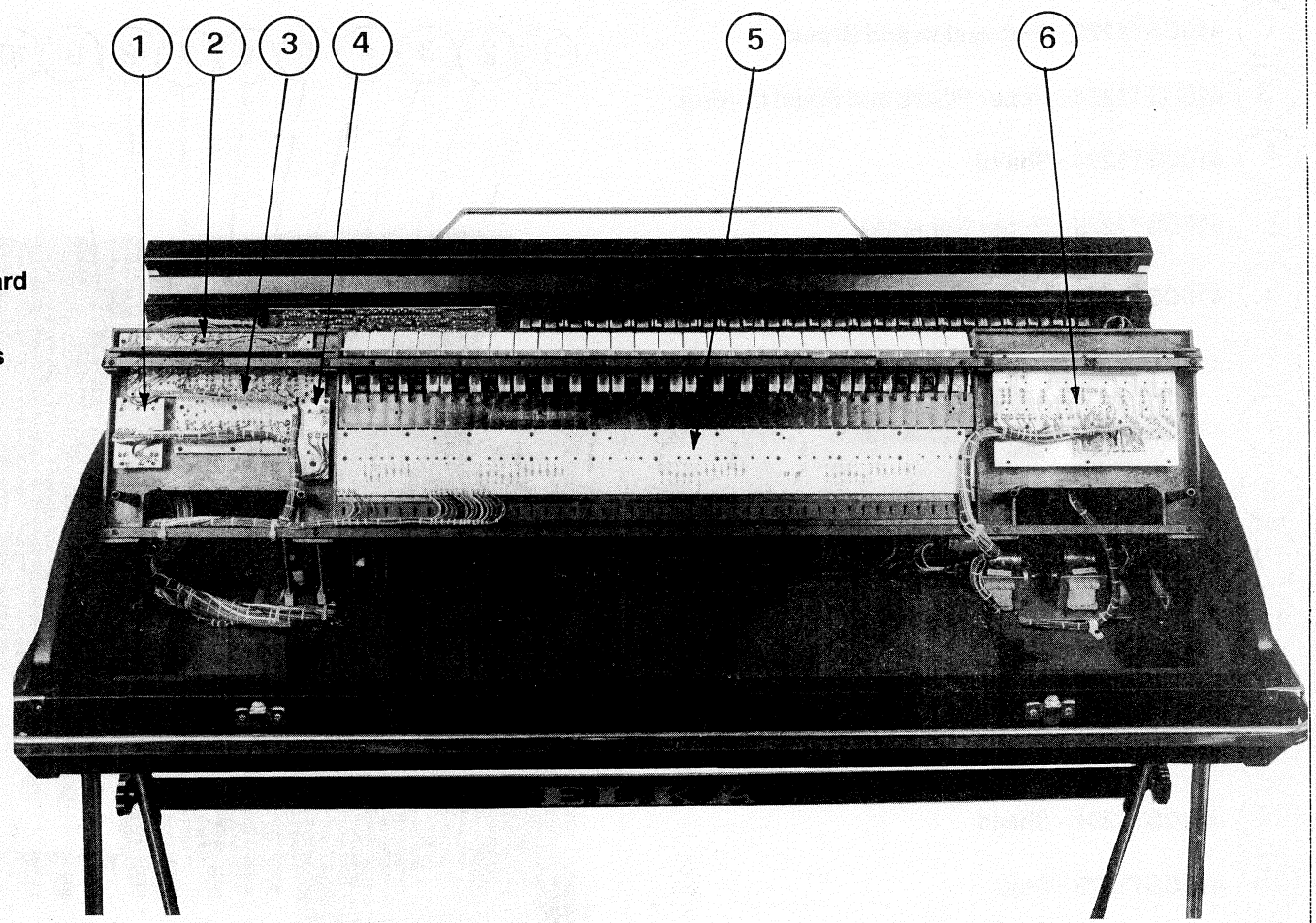


| | Model | Object: | Sheet No. D |
|---|---|---|---|
| | X109 | Inside view of the organ | Date 21-7-82 |

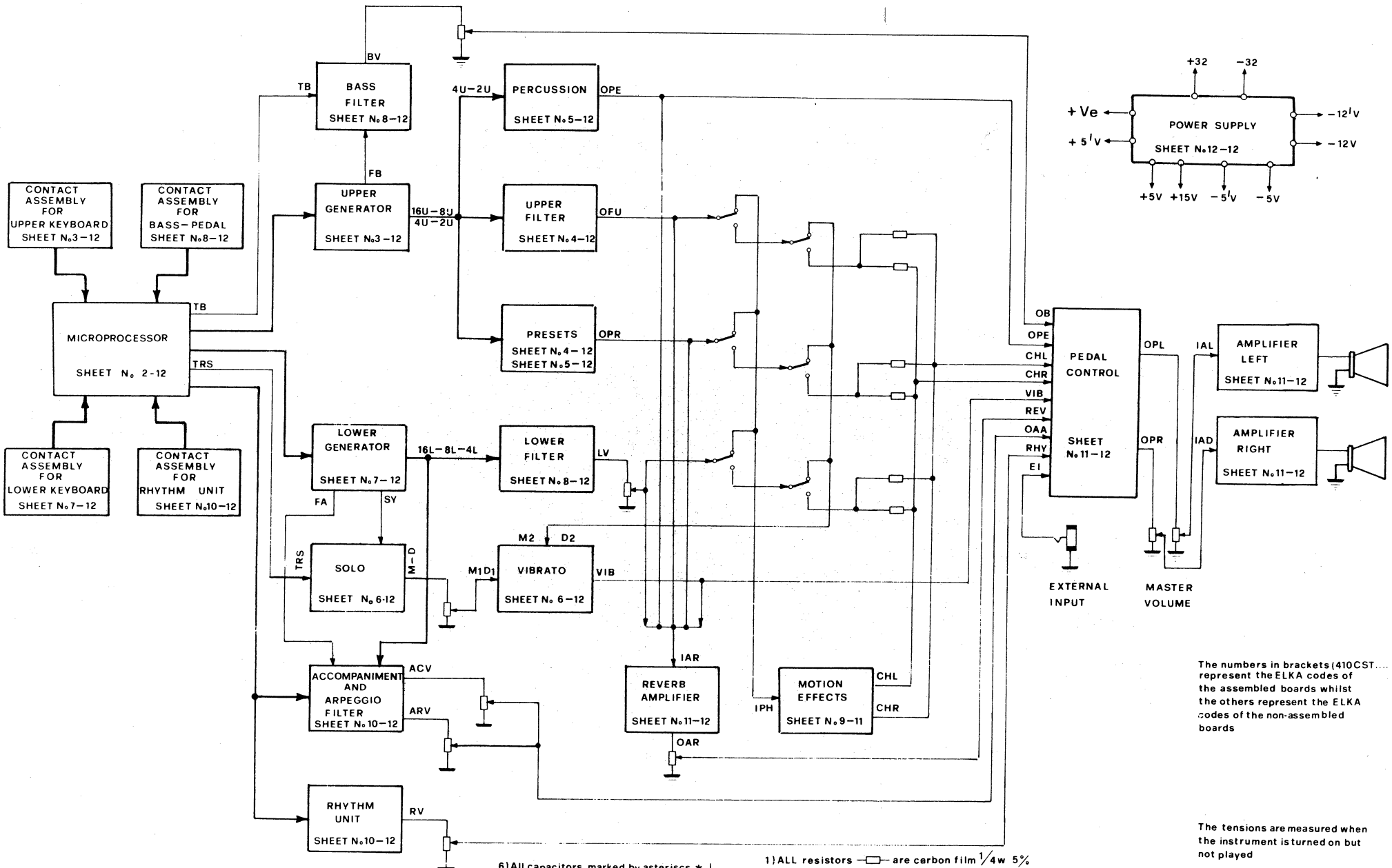


The numbers in brackets (410CST....) represent the ELKA codes of the assembled boards whilst the others represent the ELKA codes of the non-assembled boards

The tensions are measured when the instrument is turned on but not played

The firm reserves the right to make changes without any warning and to their own discretion

6) All capacitors marked by asteriscs * must be ceramic

1) ALL resistors —□— are carbon film 1/4w 5%
2) ALL resistors marked by a point —□— must be metal film 2%
3) ALL capacitors marked by a point = must be plastic film 2%
4) ALL resistors ⊟ must be mounted 10mm above board
5) ALL resistors ⊟ must be mounted 10mm above board and non-flammable

| Transistors | Equivalent |
|---|---|
| BC 171 | BC173 - BC108 - BC208 - BC209 |
| BC 173 | BC109 - BC209 - BC239 |
| BC 415B | BC205 - BC308B |
| BC 415C | BC205 - 308C |

ALL diodes are:
FDH 9439 Fairchild
or 125 ITT
or BA 130
or 2pF

DESIGNED BY
DRAWN BY
CHECHED BY

| Model | Object: | Sheet No 1-12 |
|---|---|---|
| X109 | BLOCK DIAGRAM | Date 29-9-81 |

## 410CST1271x2 (477GR12710)

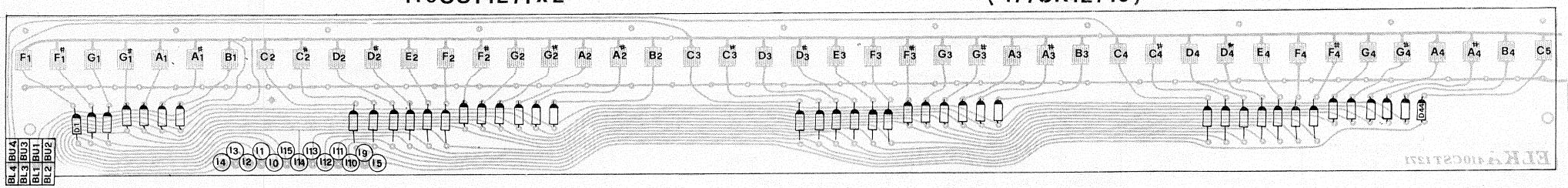


## 410CST1282 (477GR12821)

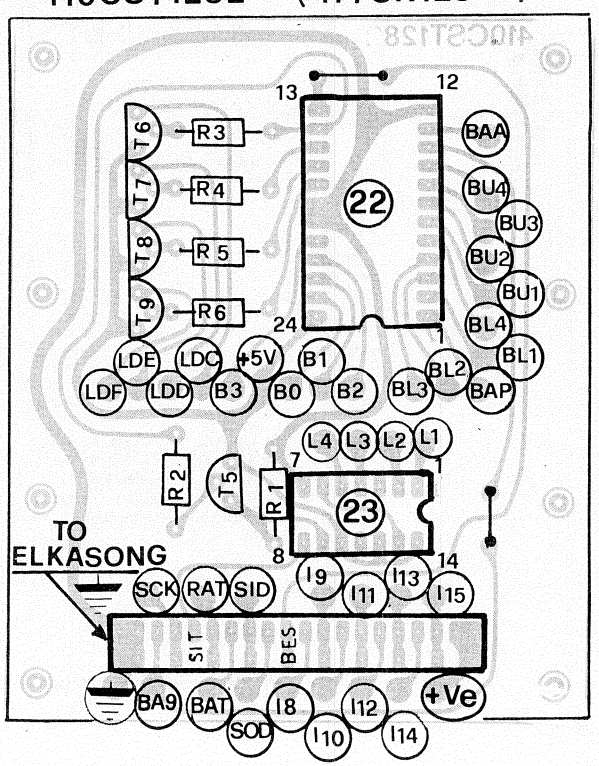


## 410CST1269 (477GR1269B)

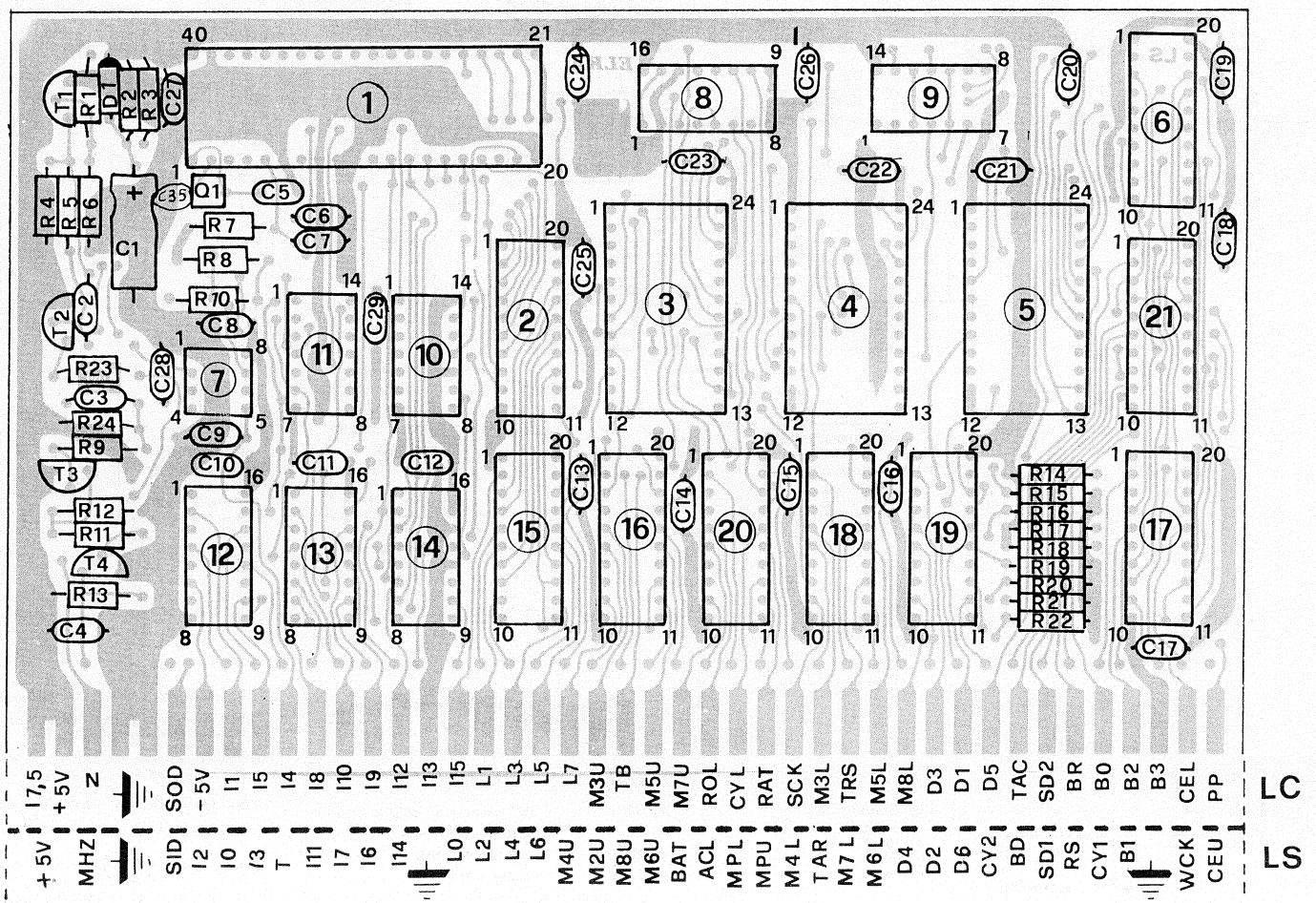


| | | | |
|---|---|---|---|
| | Model X109 | Object: Assembly of Printed Circuits | Sheet No 2a-12 |
| | | | Date 2-1-82 |

| INTEGRATED CIRCUITS | | |
|---|---|---|
| CODE | TYPE | MANUFACTURED |
| 1 | D8085AC | NEC - INTEL |
| 2 | SN74LS245 | |
| 4÷5 | MCM6810P | MOTOROLA |
| 6−15÷21 | SN74LS377N | |
| 7 | NE 555P | |
| 8 | SN74LS155N | |
| 9 | SN7404N | |
| 10−11 | SN74LS00N | |
| 12÷14 | 74LS367 | MOTOROLA |
| 3 | TMS 2532 | MOTOROLA |
| 22 | SN74154N | |
| 23 | SN74LS20 | |
| 24 | SN74221 | |

| CODE | TYPE | TRANSISTORS |
|---|---|---|
| $T_2 - T_3$ | PNP | BC 415C |
| $T_5 \div T_9$ | PNP | BC 415C |
| $T_1 - T_4$ | NPN | BC 173 |
| T10 | NPN | BSX 26 |
| T11 | PNP | BSX 36 |

SHEET No. 10−12 CST 1290−1293
SHEET No. 8−12 CST1320
SHEET No. 7−12 CST1320
SHEET No. 4−12 CST 1288
SHEET No. 3−12 CST 1321
TO ELKASNG

Q1 = 4578 4MHZ ITT

410CST0504 TUNING

410CST1339 Sheet No. 5a-12

410CST1280

410CST1282

410CST1269

CST1292 Sheet No. 5a-12

TEMPO

C5-C35 ONLY FOR I.C. (1) 8085 AC NEC

| | | | |
|---|---|---|---|
| Model X109 | Object: MICROPROCESSOR | Sheet No. 2−12 | Date 16−10−81 |

## 410CST1295 (477GR1295B)

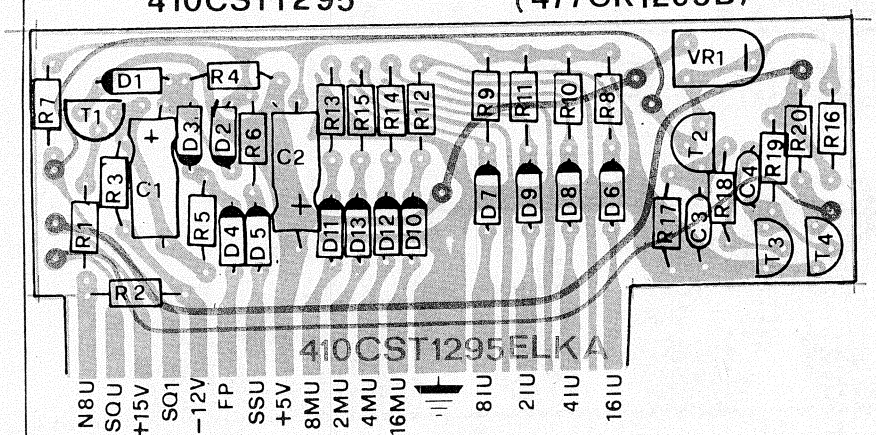


## 410CST1296 × 6 (477GR1296B)

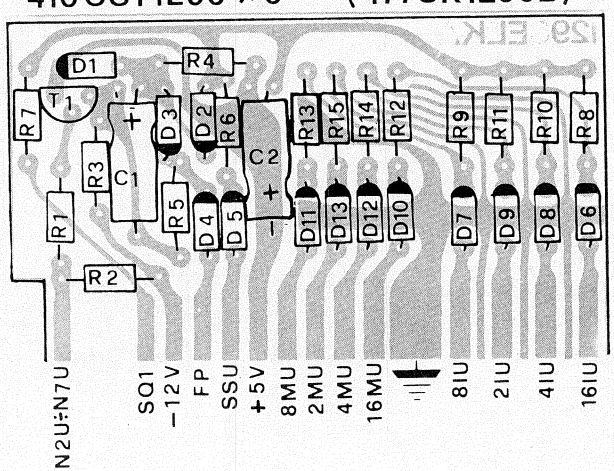


| | Model | Object: | Sheet No 3a-12 |
|---|---|---|---|
| | X109 | Assembly of Printed Circuits | Date 5-1-82 |

## 410CST1275 (477GR1275C)

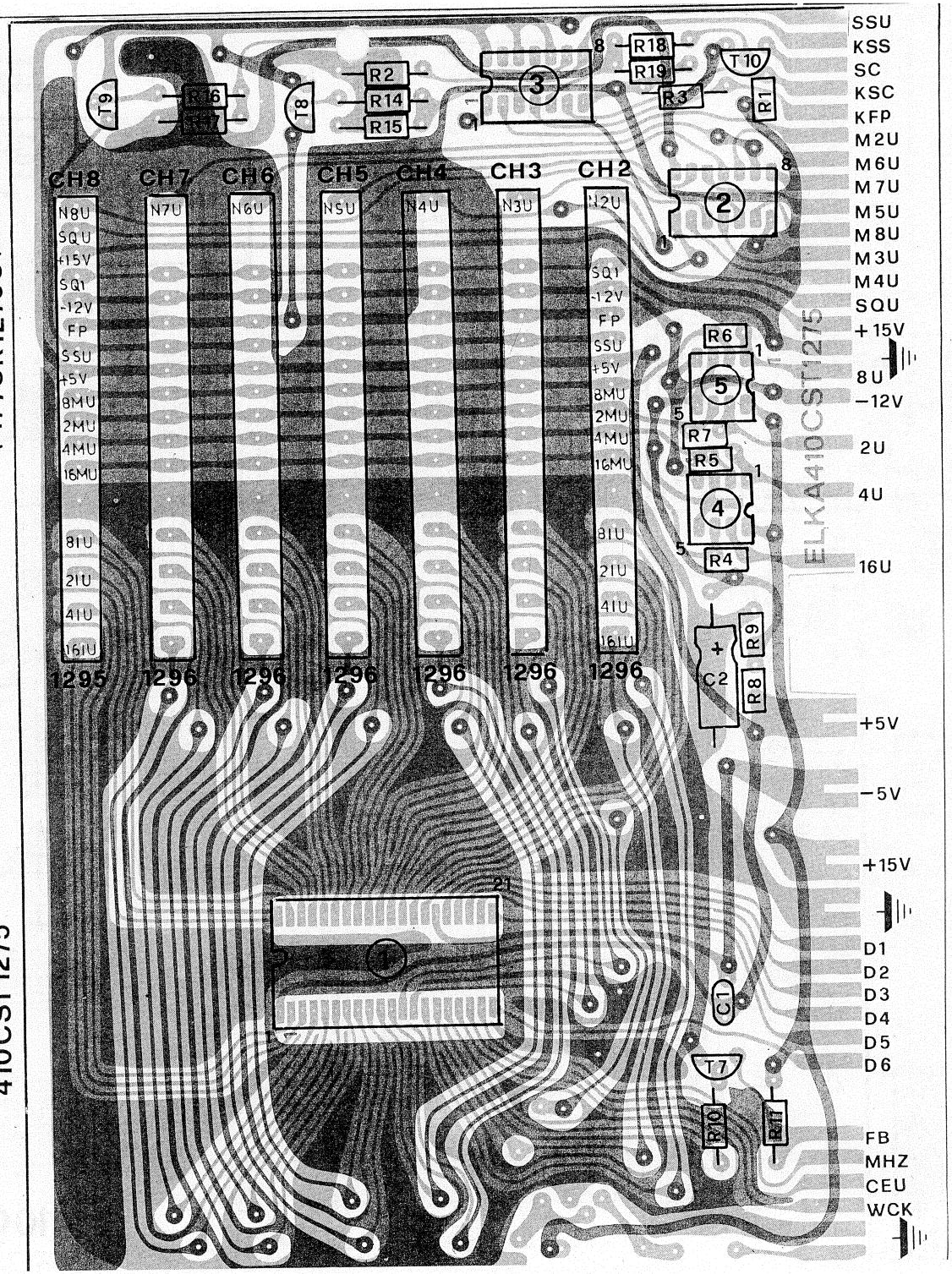

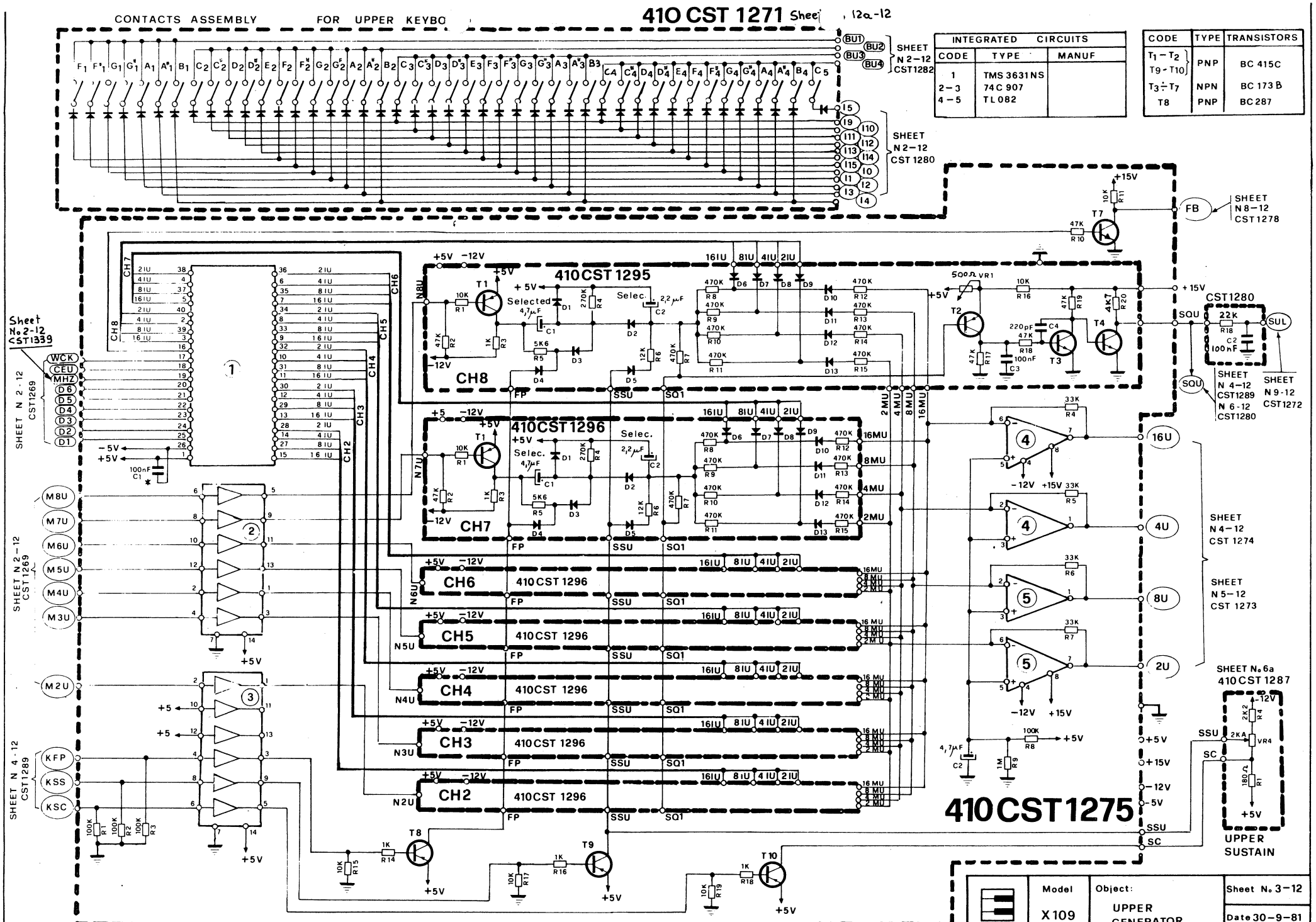
CONTACTS ASSEMBLY FOR UPPER KEYBO
410 CST 1271 Sheet 12a-12
SHEET N 2-12 CST1282
SHEET N 2-12 CST 1280
INTEGRATED CIRCUITS
CODE | TYPE | MANUF
1 | TMS 3631 NS
2-3 | 74 C 907
4-5 | TL 082
CODE | TYPE | TRANSISTORS
T1 - T2 T9 - T10 | PNP | BC 415C
T3 ÷ T7 | NPN | BC 173 B
T8 | PNP | BC 287
410 CST 1295
410 CST 1296
CH8
CH7
CH6
CH5
CH4
CH3
CH2
Selected
Selec.
CST1280
SHEET N 8-12 CST 1278
SHEET N 4-12 CST1289 N 6-12 CST1280
SHEET N 9-12 CST1272
SHEET N 4-12 CST 1274
SHEET N 5-12 CST 1273
SHEET N 2-12 CST1339
SHEET N 2-12 CST1269
SHEET N 4-12 CST1289
SHEET No 6a 410 CST 1287
UPPER SUSTAIN
410 CST 1275
Model X109
Object: UPPER GENERATOR
Sheet No 3-12
Date 30-9-81

| Model | Object: | Sheet No 4a-12 |
|---|---|---|
| X109 | Assembly of Printed Circuits | Date 6-1-82 |

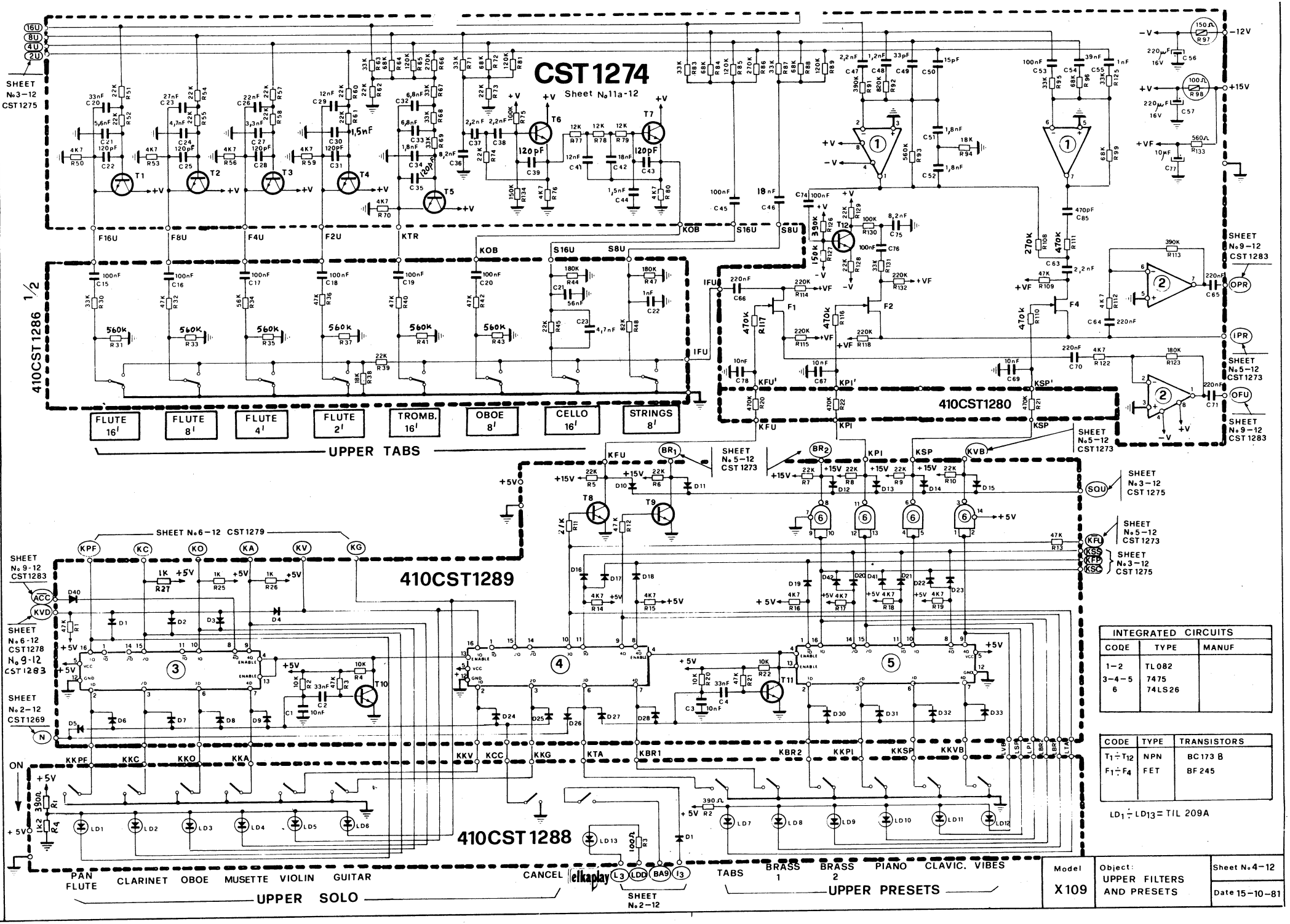


| INTEGRATED CIRCUITS | | |
|---|---|---|
| CODE | TYPE | MANUF |
| 1-2 | TL082 | |
| 3-4-5 | 7475 | |
| 6 | 74LS26 | |

| CODE | TYPE | TRANSISTORS |
|---|---|---|
| $T_1 \div T_{12}$ | NPN | BC173 B |
| $F_1 \div F_4$ | FET | BF245 |

$LD_1 \div LD_{13}$ = TIL 209A

| Model | Object: | Sheet No 4-12 |
|---|---|---|
| X109 | UPPER FILTERS AND PRESETS | Date 15-10-81 |

410CST1339 (477GR1339A)

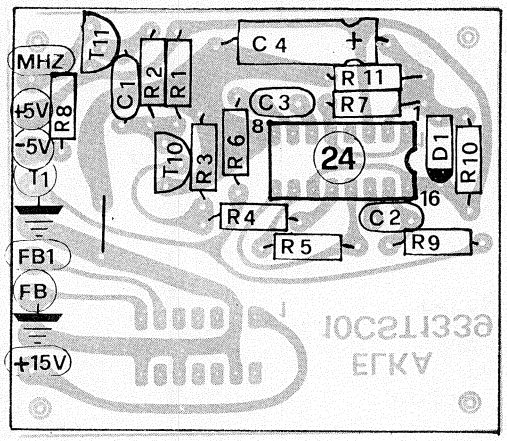


MASTER VOLUME

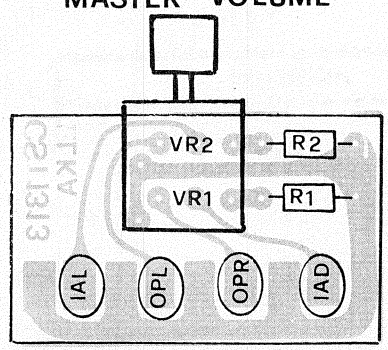


410CST1313 (477GR13130)

TEMPO

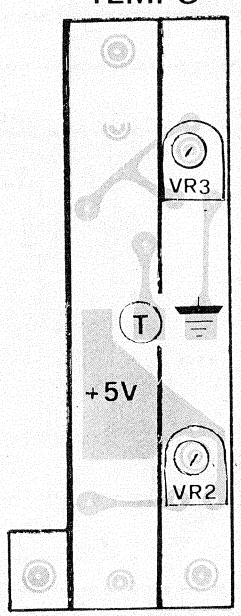


410CST1292
(477GR12920)

(477GR05041)
410CST0504

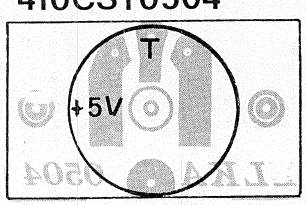


TUNING

(410CST12730)

410CST1273

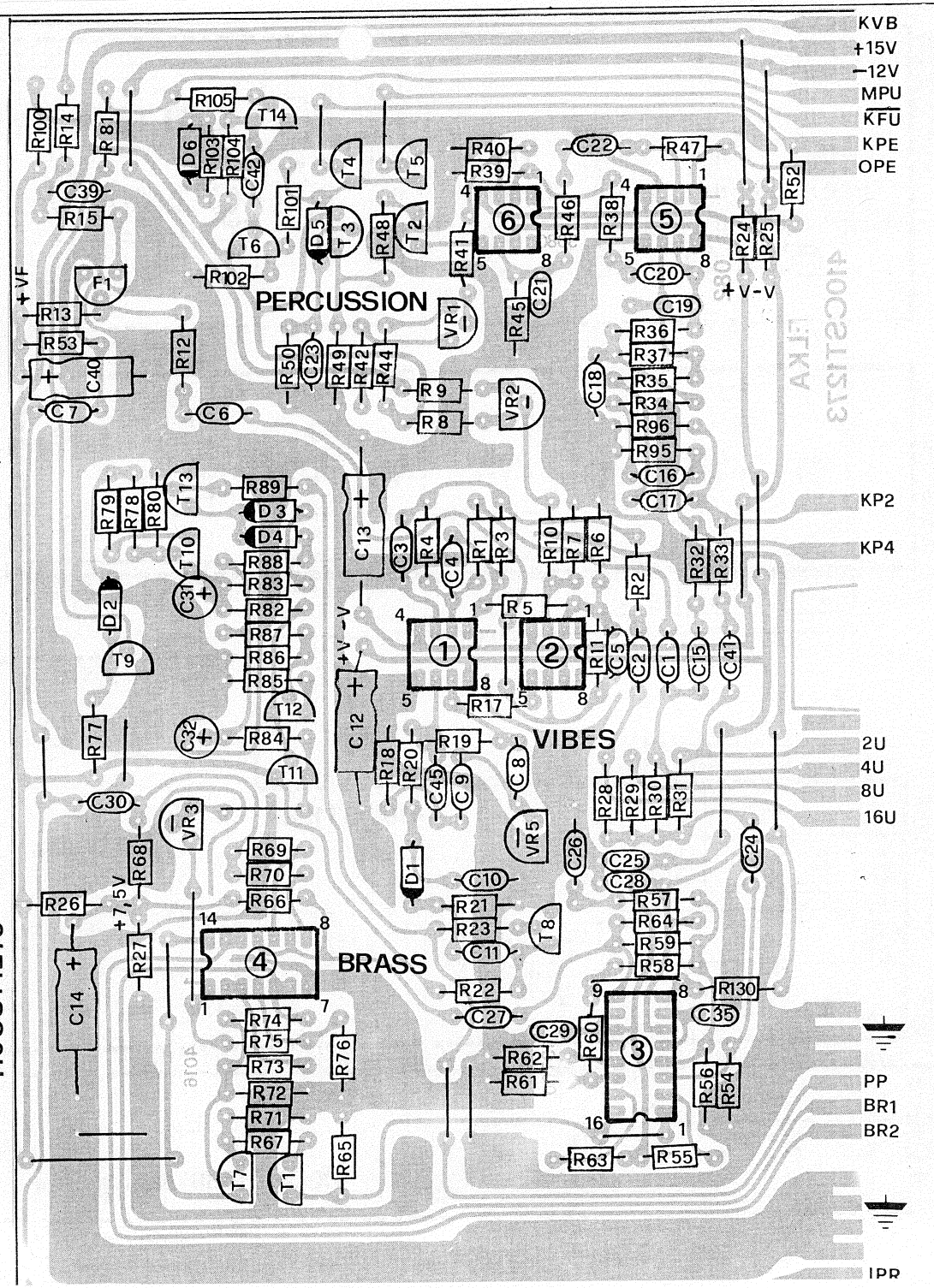


| | Model | Sheet No 5a - 12 |
|---|---|---|
| | X109 | Date 6 - 1 - 82 |

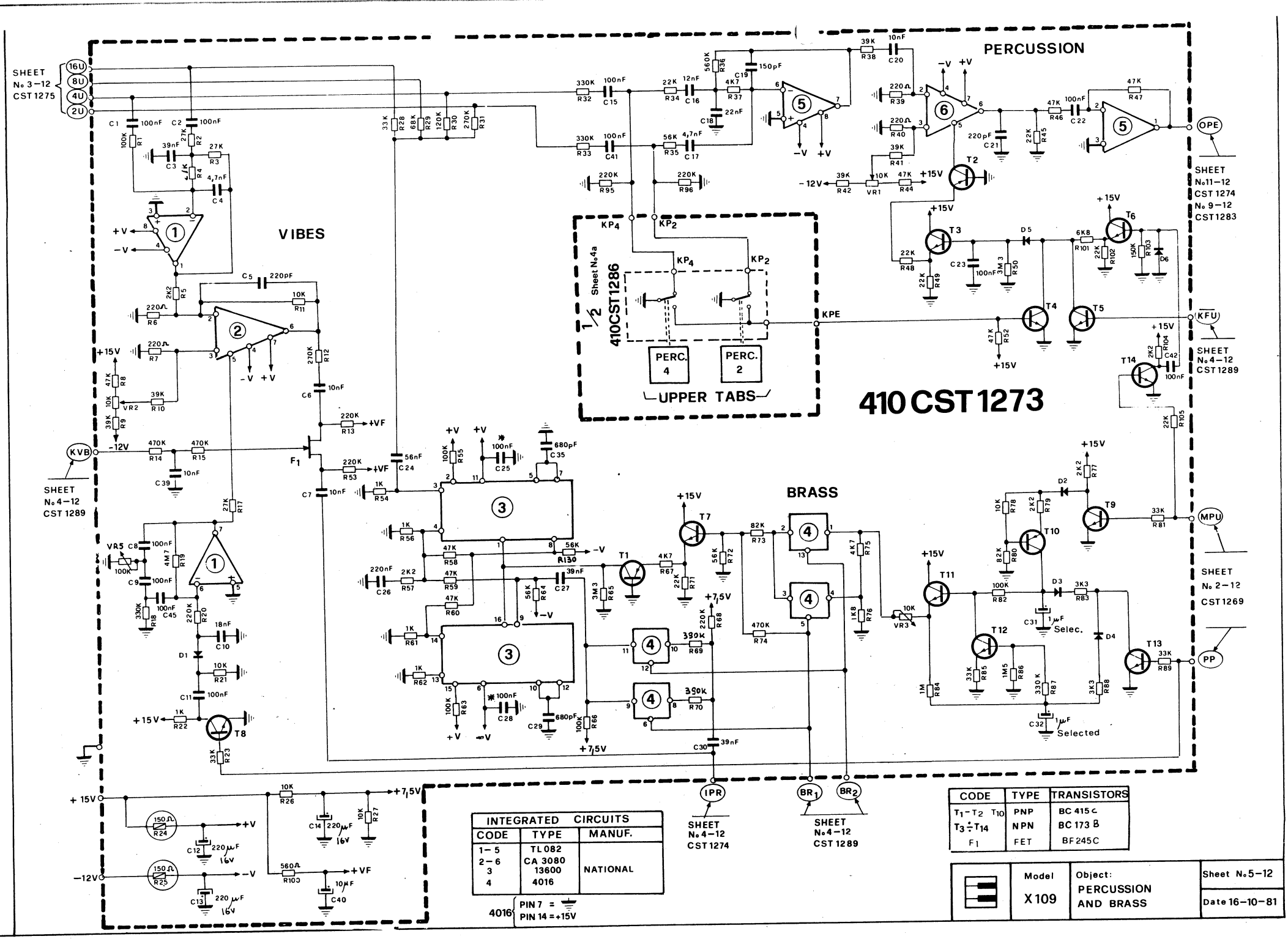


| INTEGRATED CIRCUITS | | |
|---|---|---|
| CODE | TYPE | MANUF. |
| 1–5 | TL082 | NATIONAL |
| 2–6 | CA 3080 | |
| 3 | 13600 | |
| 4 | 4016 | |

4016 { PIN 7 = ⏚ ; PIN 14 = +15V }

| CODE | TYPE | TRANSISTORS |
|---|---|---|
| $T_1$–$T_2$ $T_{10}$ | PNP | BC 415 C |
| $T_3 \div T_{14}$ | NPN | BC 173 B |
| $F_1$ | FET | BF 245 C |

| Model | Object: | Sheet No. 5–12 |
|---|---|---|
| X109 | PERCUSSION AND BRASS | Date 16–10–81 |

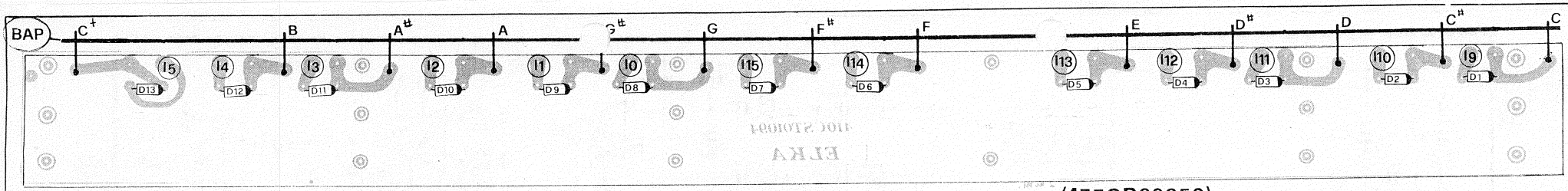


410CST0985

(477GR09850)

(477GR12870)
410CST1287

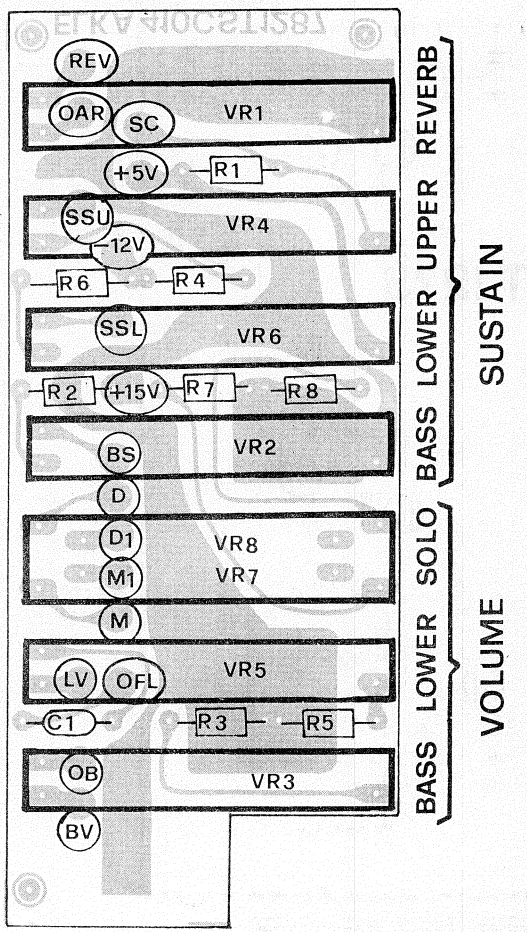


410CST1279

(477GR1279C)

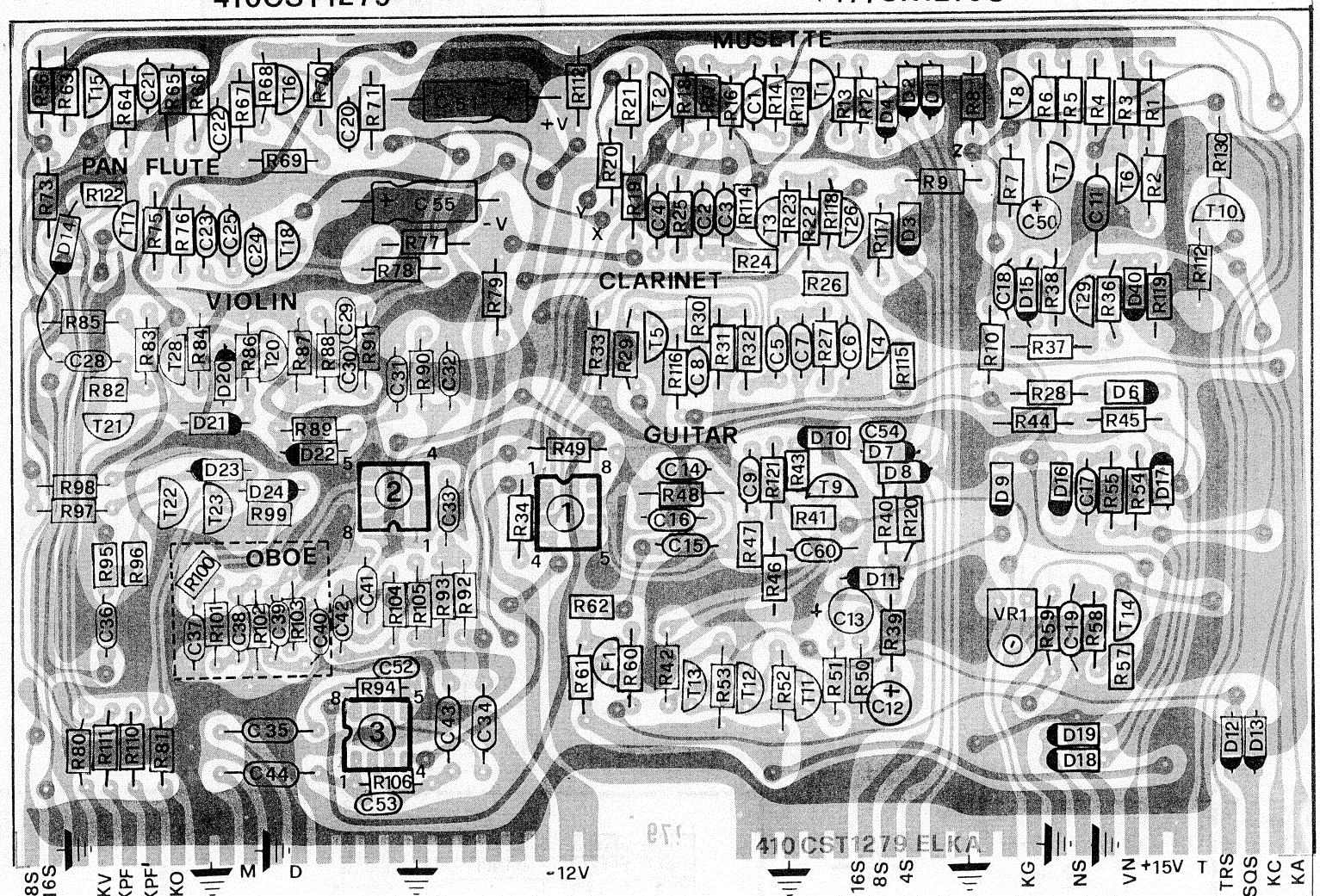


| | Model | Object: | Sheet No. 6a-12 |
|---|---|---|---|
| | X109 | Assembly of Printed Circuits | Date 6-1-82 |

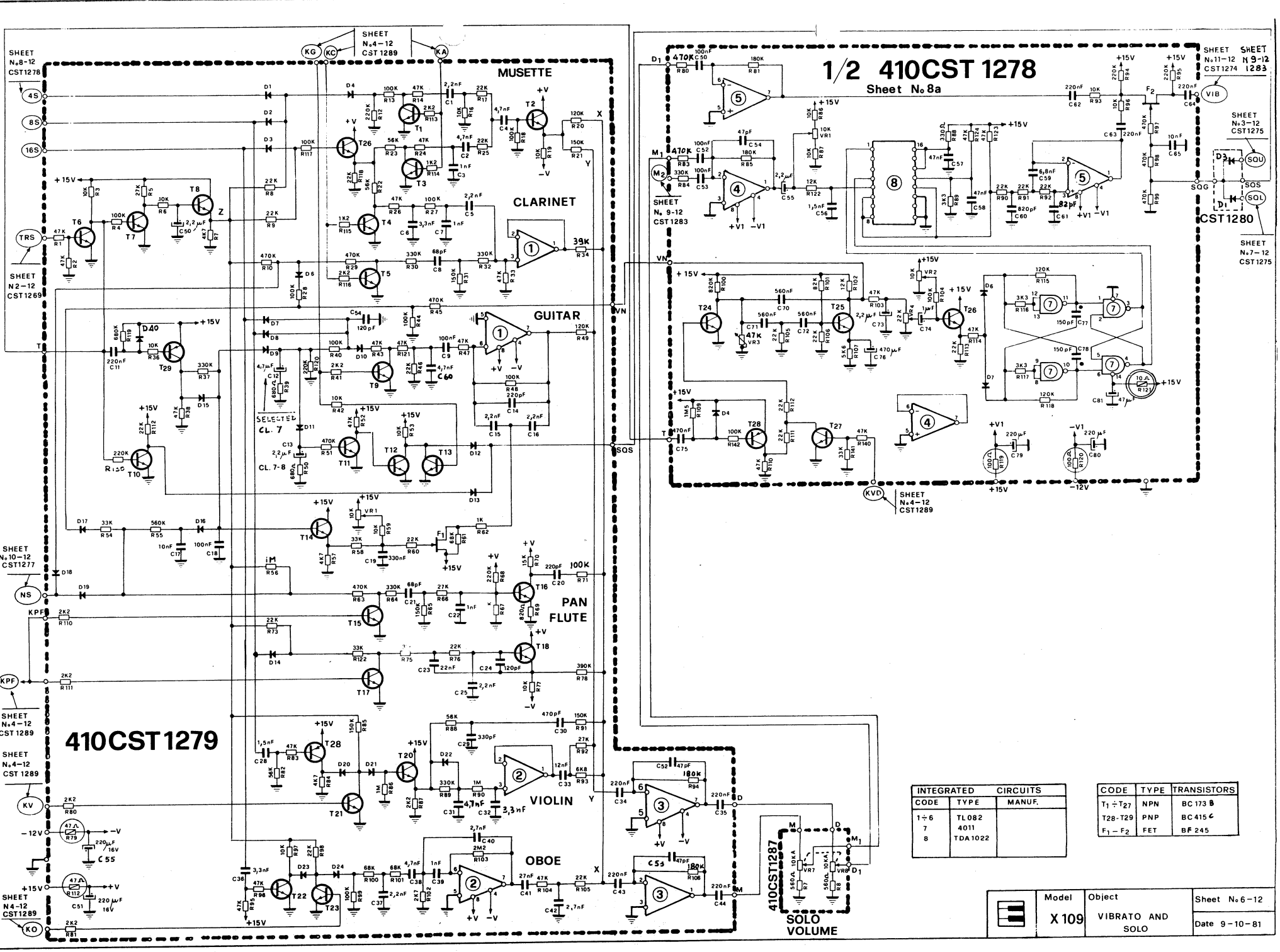


| INTEGRATED CIRCUITS | | |
|---|---|---|
| CODE | TYPE | MANUF. |
| 1÷6 | TL 082 | |
| 7 | 4011 | |
| 8 | TDA 1022 | |

| CODE | TYPE | TRANSISTORS |
|---|---|---|
| $T_1 \div T_{27}$ | NPN | BC 173 B |
| T28-T29 | PNP | BC 415 C |
| $F_1 - F_2$ | FET | BF 245 |

| Model | Object | Sheet |
|---|---|---|
| X 109 | VIBRATO AND SOLO | No 6-12 |
| | | Date 9-10-81 |

## 410CST1297 (477GR12970)

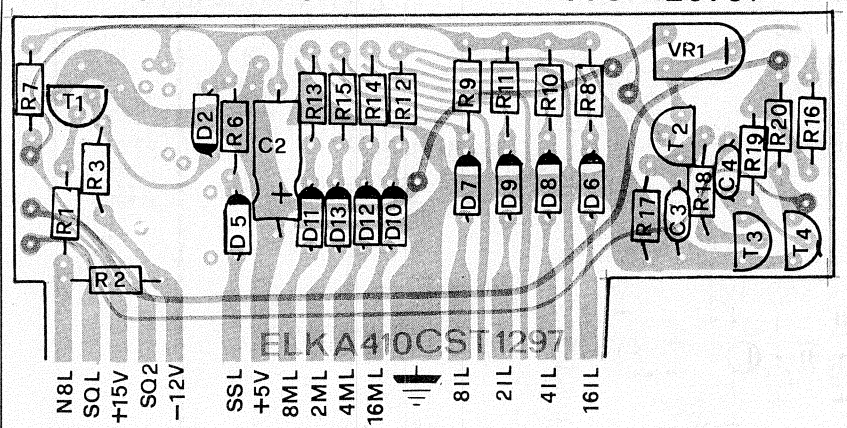


## 410CST1298 × 5 (477GR1298C)

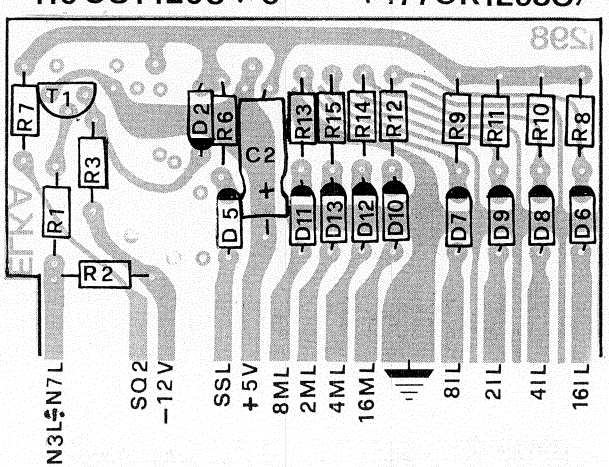


| | Model | Object: | Sheet No 7a-12 |
|---|---|---|---|
| | X 109 | Assembly of Printed Circuits | Date 7-1-82 |

## 410CST1275 (477GR1275D)

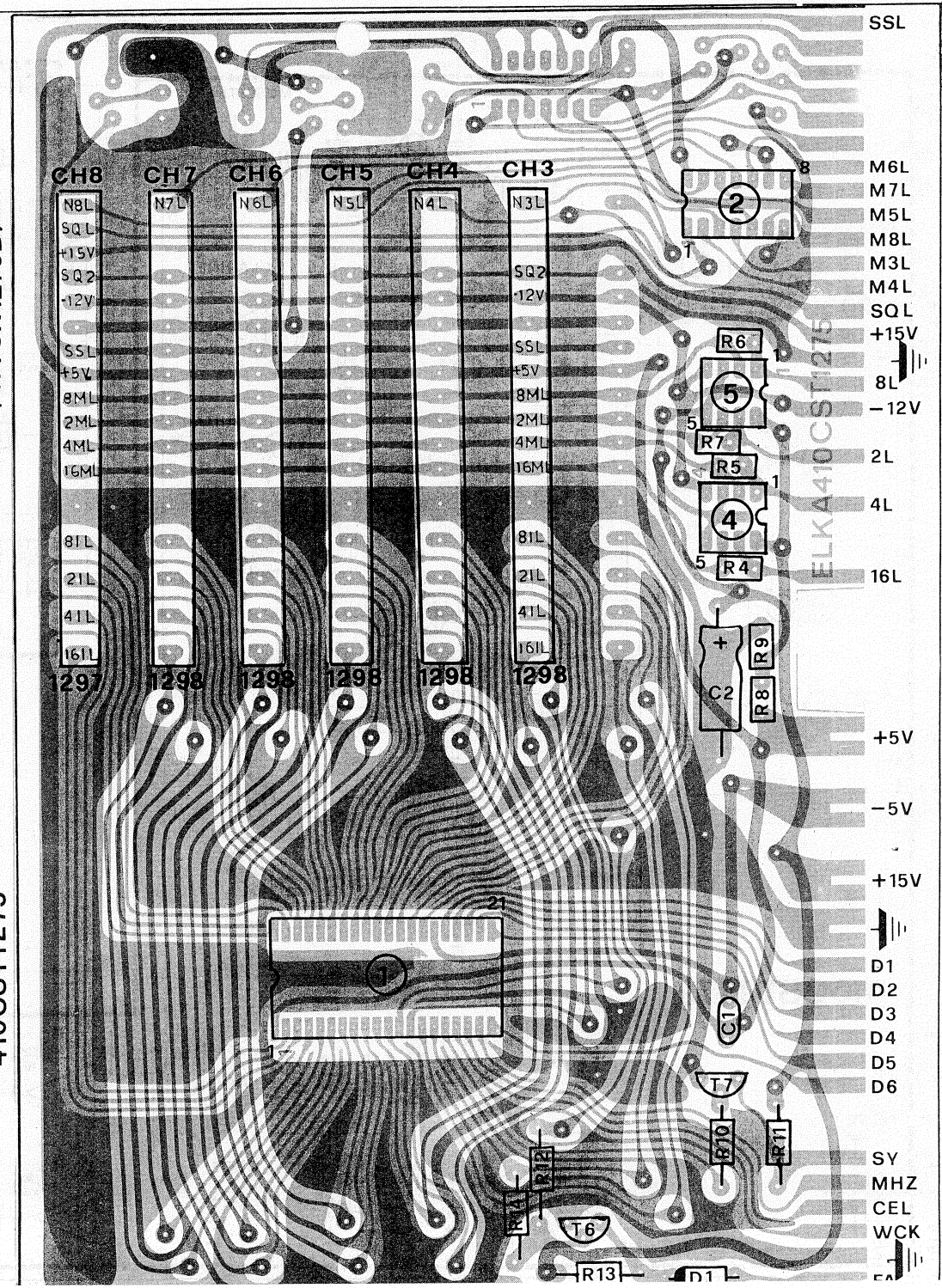

CONTACTS ASSEMBLY FOR LOWER KEYBD 410CST1271 Sh No 2a-12

| INTEGRATED CIRCUITS | | |
|---|---|---|
| CODE | TYPE | MANUF |
| 1 | TMS 3631 NS | |
| 2 | 74C 907 | |
| 4 – 5 | TL 082 | |

| CODE | TYPE | TRANSISTORS |
|---|---|---|
| T1 - T2 | PNP | BC 415C |
| T3 ÷ T7 | NPN | BC 173B |

SHEET N 2-12 CST1282

SHEET N 2-12 CST 1280

SHEET N 10-12 CST 1277

SHEET N8-12 CST 1278

Sheet No.2-12 CST 1339

SHEET N 2-12 CST1269

SHIFT N 2-12 CST1269

410CST 1297

410CST 1298

CH8

CH7

CH6

CH5

CH4

CH3

CST1280

SHEET N 6-12 CST1280

SHEET N 9-12 CST1272

SHEET N8-12 CST 1278

SHEET N10-12 CST 1277

Sheet No 6a 410CST 1287

LOWER SUSTAIN

410CST1275

| Model | Object: | Sheet No. 7-12 |
|---|---|---|
| X109 | LOWER GENERATOR | Date 30-9-81 |

410CST1285 (477GR12850)

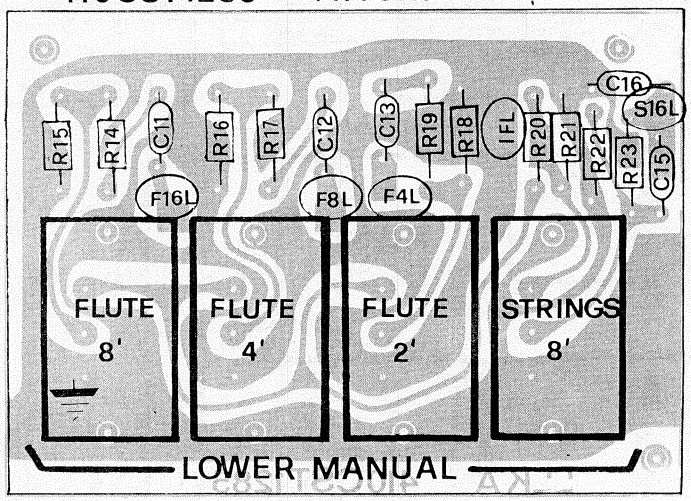


410CST1284 (477GR12840)

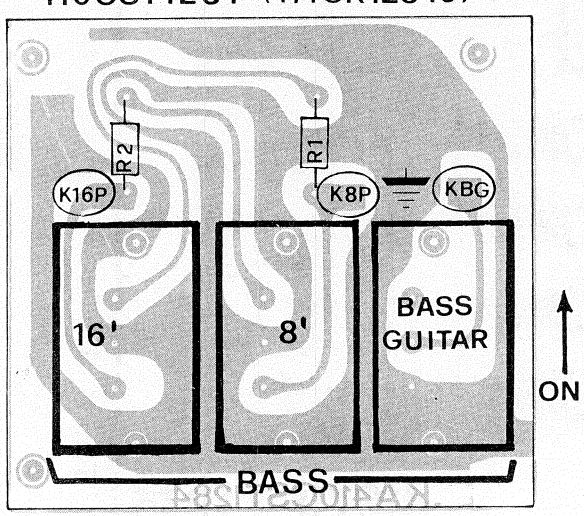


410CST1278 (477GR1278C)

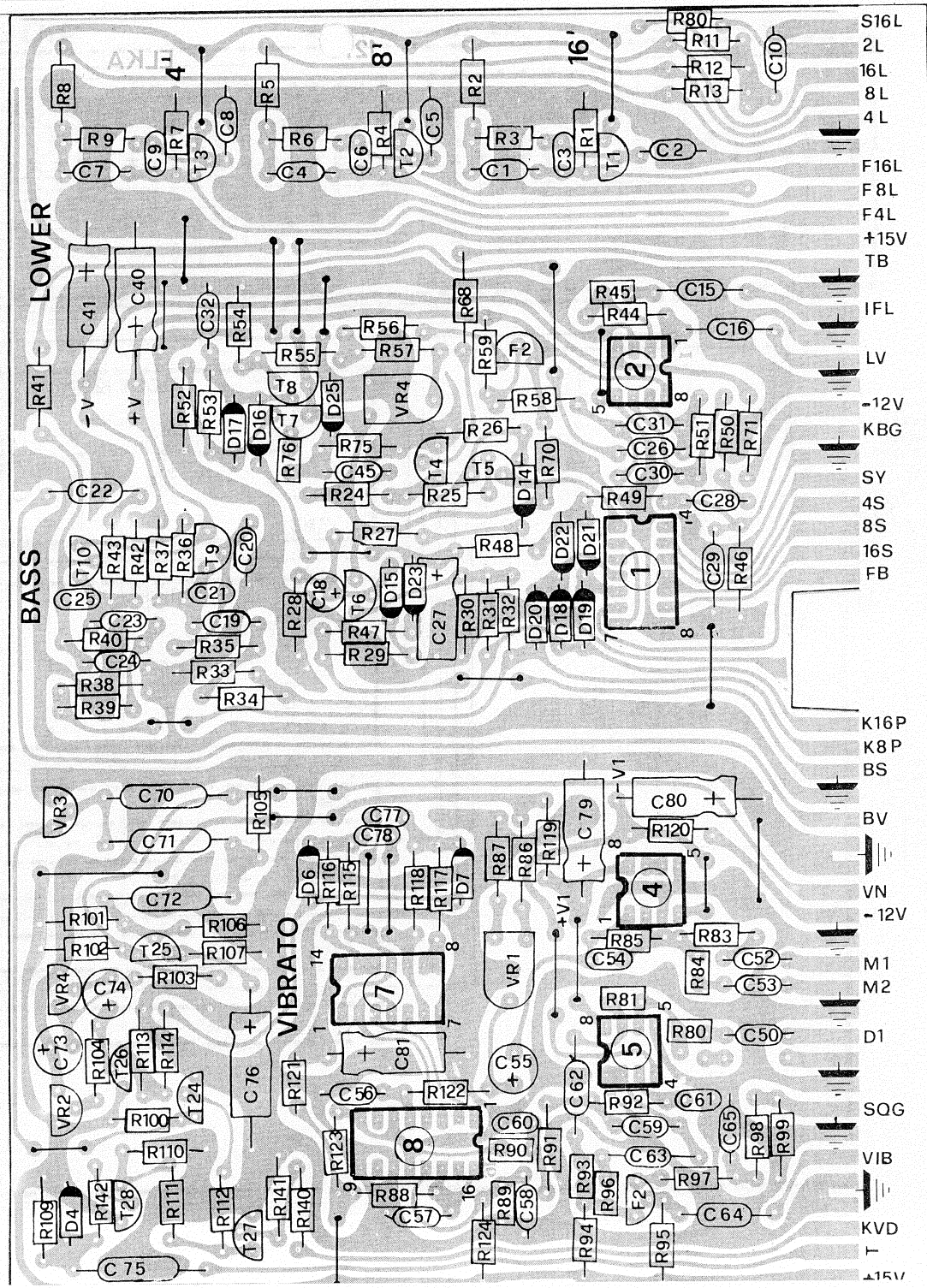


| | Model | Object: | Sheet No 8a-12 |
|---|---|---|---|
| | X 109 | Assembly of Printed Circuits | Date 8-1-82 |

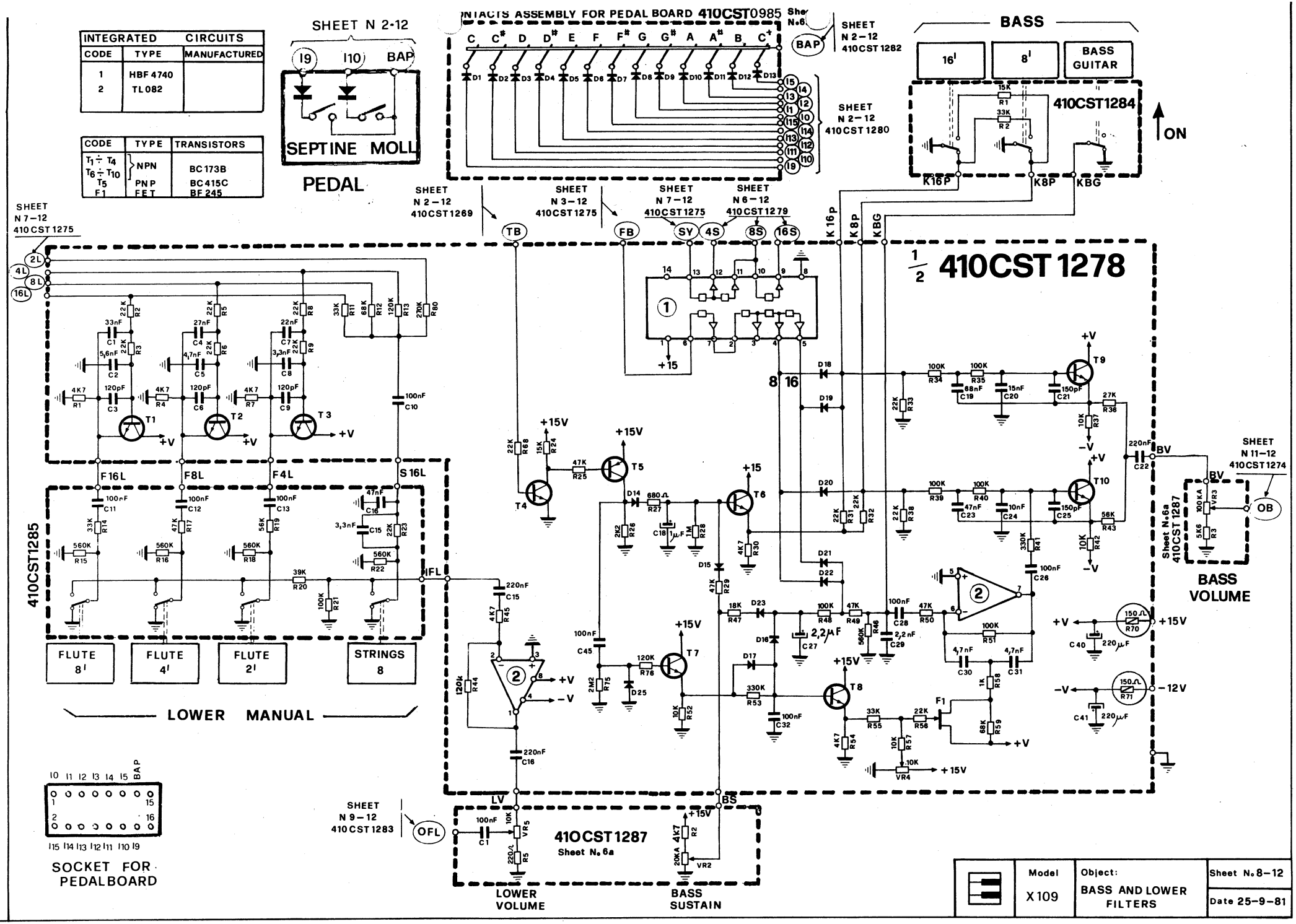

INTEGRATED CIRCUITS
CODE TYPE MANUFACTURED
1 HBF 4740
2 TL082
CODE TYPE TRANSISTORS
T1 ÷ T4 T6 ÷ T10 NPN BC173B
T5 PNP BC415C
F1 FET BF245
SHEET N 2-12
I9 I10 BAP
SEPTINE MOLL
PEDAL
CONTACTS ASSEMBLY FOR PEDAL BOARD 410CST0985
SHEET N 2-12 410CST1282
SHEET N 2-12 410CST1280
BASS
16' 8' BASS GUITAR
410CST1284
ON
K16P K8P KBG
SHEET N 2-12 410CST1269
SHEET N 3-12 410CST1275
SHEET N 7-12 410CST1275
SHEET N 6-12 410CST1279
TB FB SY 4S 8S 16S
SHEET N 7-12 410CST1275
1/2 410CST1278
410CST1285
F16L F8L F4L S16L
IFL
FLUTE 8' FLUTE 4' FLUTE 2' STRINGS 8
LOWER MANUAL
SHEET N 11-12 410CST1274
BV OB
Sheet N.6a 410CST1287
BASS VOLUME
SHEET N 9-12 410CST1283
OFL
LV BS
410CST1287
Sheet N.6a
LOWER VOLUME
BASS SUSTAIN
SOCKET FOR PEDALBOARD
Model X109
Object: BASS AND LOWER FILTERS
Sheet N.8-12
Date 25-9-81

Model X 109

Object: Assembly of Printed Circuits

Sheet No 9a-12

Date 9-1-82

410CST1283 (477GR12830)

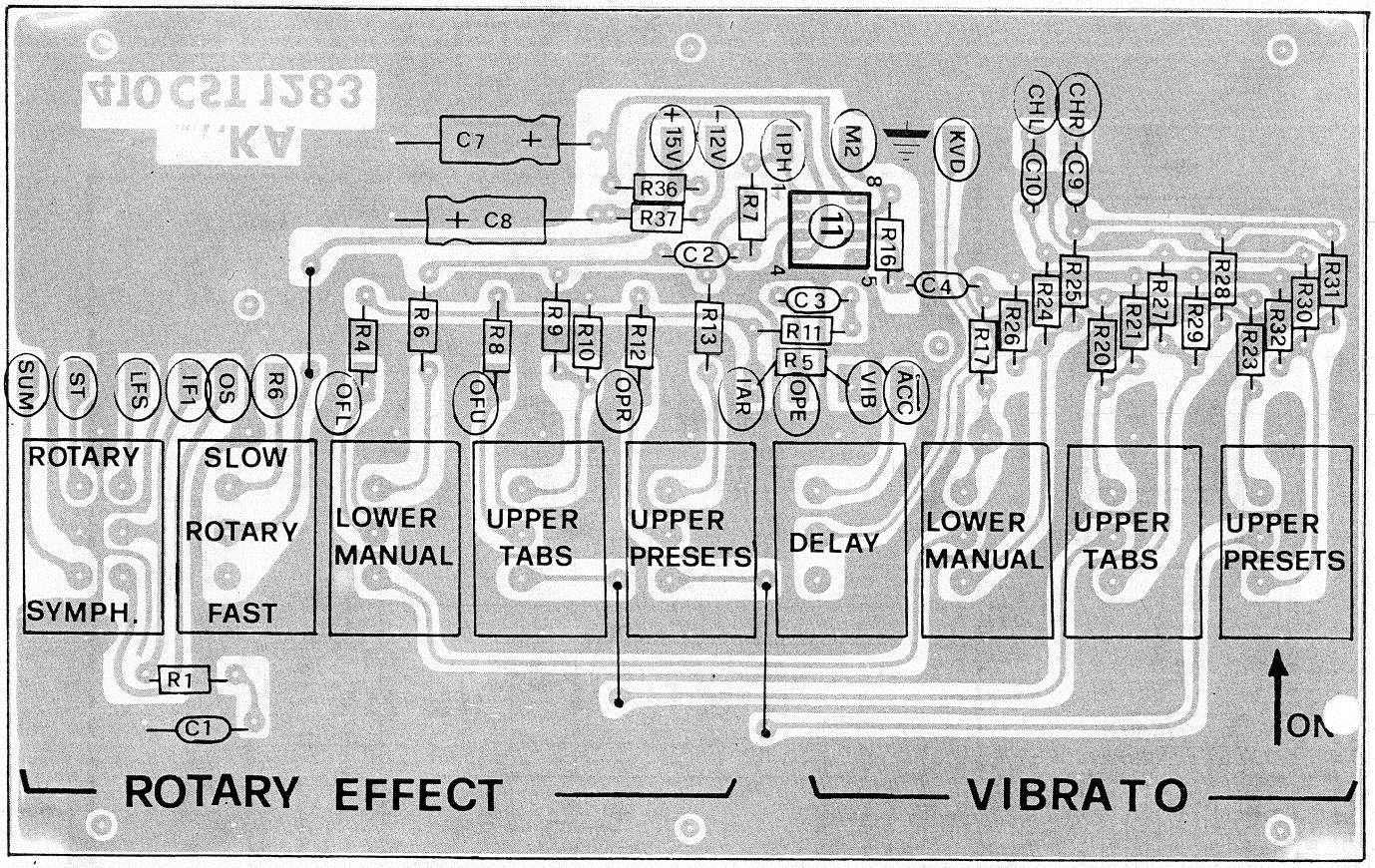


410CST1272 (477GR12720)

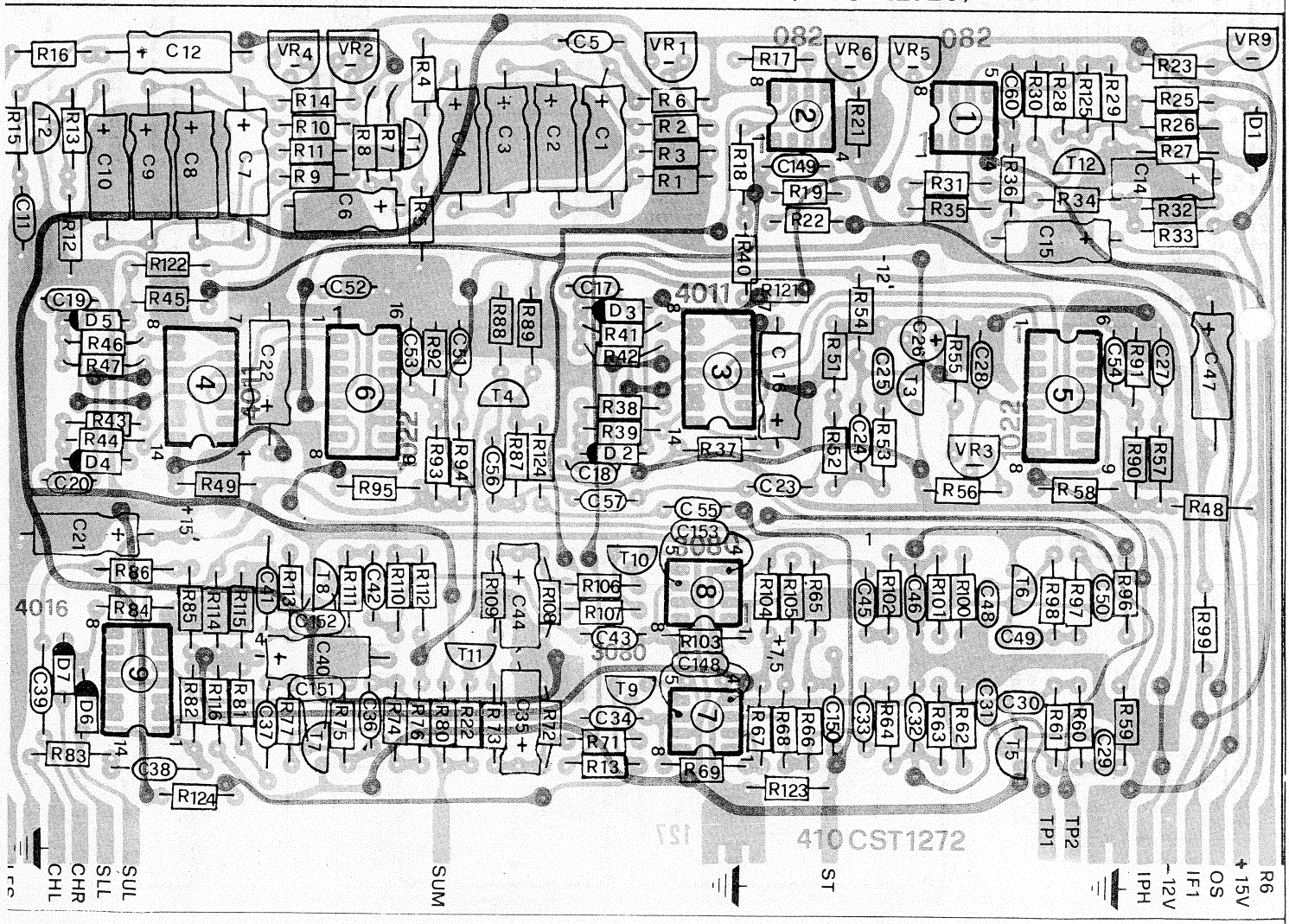

| INTEGRATED CIRCUITS | | |
|---|---|---|
| CODE | TYPE | MANUFACTURED |
| 1–2 | TL 082 | |
| 3 – 4 | 4011 | |
| 5 – 6 | TDA 1022 | |
| 7 – 8 | CA 3080 | |
| 9 | 4016 | |

| CODE | TYPE | TRANSISTORS |
|---|---|---|
| T1 ÷ T8 | NPN | BC 173C |
| T12 - T13 | | |
| T9 ÷ T11 | PNP | BC 415C |

SHEET N 8–12 CST1287 → OFL
SHEET N 6–12 CST1278 → VIB
SHEE N 4–12 CST1274 → OFU
SHEET N 5 –12 CST1273 → OPE
SHEET N 4-12 CST1274 → OPR
SHEET N 11-12 41CST1319 → IAR
SHEET N 4-12 CST1289 → KVD, ACC
SHEET N 6-12 CST1278 → M2
SHEET N 11–12 CST 1274 → CHR, CHL

IPH, LFS, R6, IF1, IF1, R6, OS, ST, SUM

ROTARY SINPHONIC | SLOW FAST | LOWER MANUAL | UPPER TABS | UPPER PRESETS — ROTARY EFFECT

VIBRATO DELAY | LOWER MANUAL | UPPER TABS | UPPER PRESETS — VIBRATO - EFFECTS

ON

410CST1283

SELECT. CL.6

SHEET N 11–12 CST 1274 → CHL
SHEET N 3–12 CST 1280 → SUL
SHEET N 7 – 12 CST 1280 → SLL
SHEET N 11–12 CST 1274 → CHR

TP1, TP2

410CST1272

| Model | Object: | Sheet N. 9 - 12 |
|---|---|---|
| X109 | ROTARY EFFECT | Date 25-9-81 |

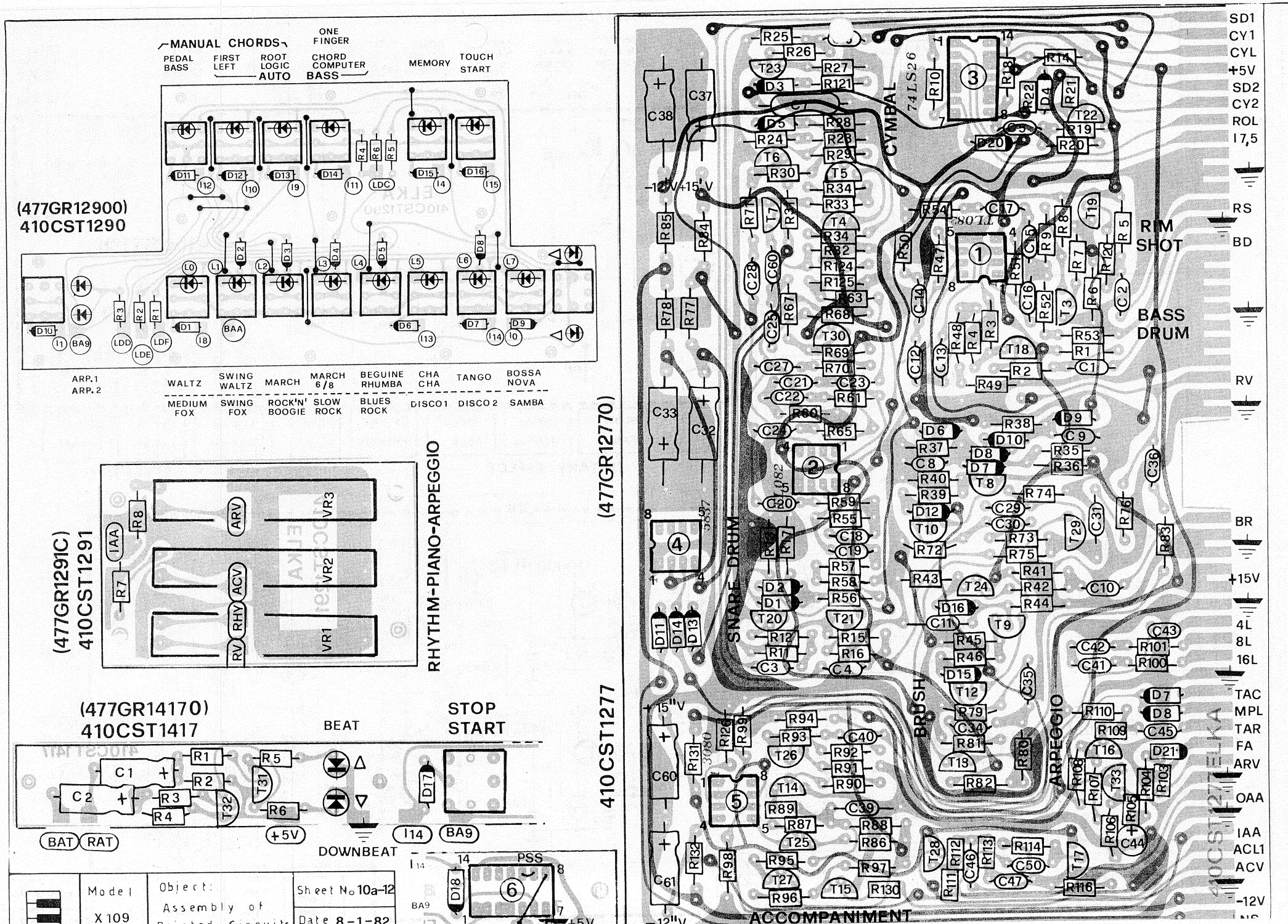
MANUAL CHORDS
PEDAL BASS
FIRST LEFT
ROOT LOGIC AUTO
ONE FINGER CHORD COMPUTER BASS
MEMORY
TOUCH START
(477GR12900)
410CST1290
ARP.1
ARP.2
WALTZ
SWING WALTZ
MARCH
MARCH 6/8
BEGUINE RHUMBA
CHA CHA
TANGO
BOSSA NOVA
MEDIUM FOX
SWING FOX
ROCK'N' BOOGIE
SLOW ROCK
BLUES ROCK
DISCO1
DISCO2
SAMBA
(477GR1291C)
410CST1291
RHYTHM-PIANO-ARPEGGIO
(477GR14170)
410CST1417
BEAT
STOP START
BAT
RAT
+5V
DOWNBEAT
PSS
(477GR12770)
410CST1277
CYMBAL
RIM SHOT
BASS DRUM
SNARE DRUM
BRUSH
ARPEGGIO
ACCOMPANIMENT
SD1
CY1
CYL
+5V
SD2
CY2
ROL
17,5
RS
BD
RV
BR
+15V
4L
8L
16L
TAC
MPL
TAR
FA
ARV
OAA
IAA
ACL1
ACV
-12V
Model X 109
Object: Assembly of Printed Circuits
Sheet No 10a-12
Date 8-1-82

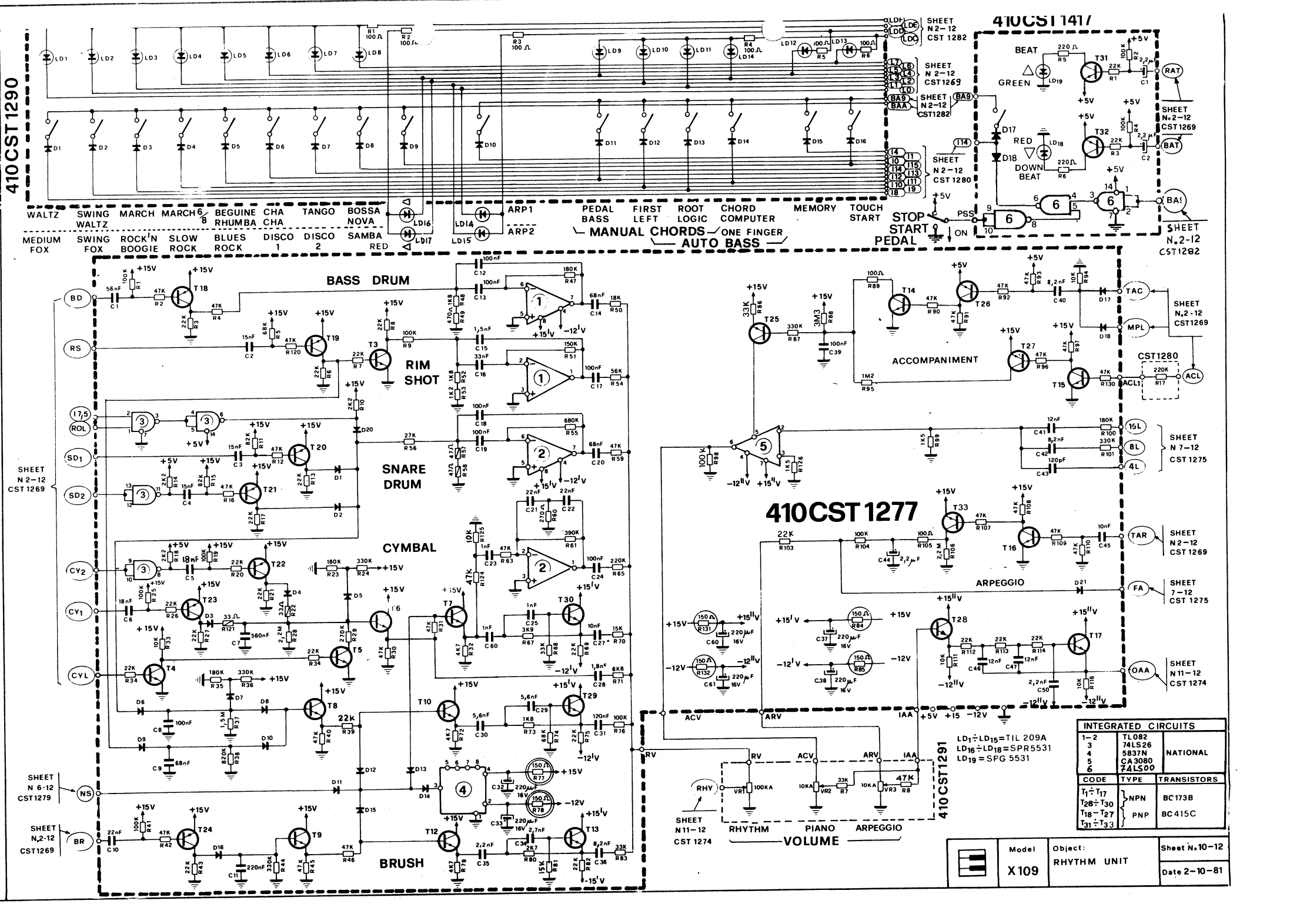
410CST1290
410CST1277
410CST1291
WALTZ
SWING WALTZ
MARCH
MARCH 6/8
BEGUINE RHUMBA
CHA CHA
TANGO
BOSSA NOVA
MEDIUM FOX
SWING FOX
ROCK'N BOOGIE
SLOW ROCK
BLUES ROCK
DISCO 1
DISCO 2
SAMBA
ARP1
ARP2
PEDAL BASS
FIRST LEFT
ROOT LOGIC
CHORD COMPUTER
MEMORY
TOUCH START
MANUAL CHORDS
ONE FINGER
AUTO BASS
STOP
START
PEDAL
ON
BEAT
GREEN
DOWN BEAT
RED
BASS DRUM
RIM SHOT
SNARE DRUM
CYMBAL
BRUSH
ACCOMPANIMENT
ARPEGGIO
RHYTHM
PIANO
ARPEGGIO
VOLUME
LD1÷LD15=TIL 209A
LD16÷LD18=SPR5531
LD19=SFG 5531
INTEGRATED CIRCUITS
1–2 TL082
3 74LS26
4 5837N
5 CA3080
6 74LS00
NATIONAL
CODE
TYPE
TRANSISTORS
T1÷T17 NPN BC173B
T28÷T30 NPN BC173B
T18–T27 PNP BC415C
T31÷T33 PNP BC415C
Model X109
Object: RHYTHM UNIT
Sheet N.10–12
Date 2–10–81

Model X 109

Object: Assembly of Printed Circuits

Sheet No. 11a-12

Date 8-4-82

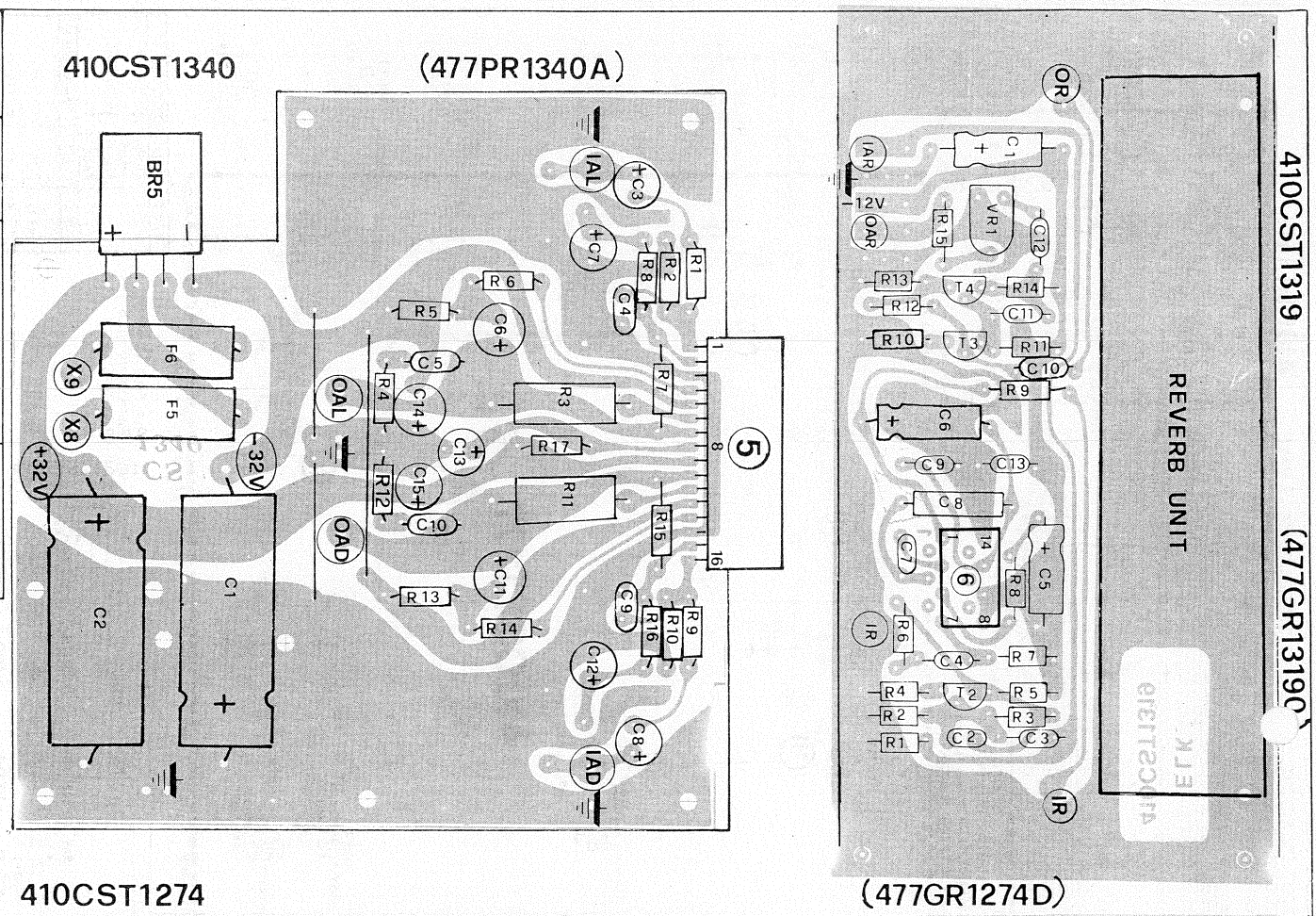

| INTEGRATED CIRCUITS | | |
|---|---|---|
| CODE | TYPE | MANUFACTURED |
| 1–2 | TL 082 | |
| 3 – 4 | 4011 | |
| 5 – 6 | TDA 1022 | |
| 7 – 8 | CA 3080 | |
| 9 | 4016 | |

| CODE | TYPE | TRANSISTORS |
|---|---|---|
| T1 ÷ T8 / T12 - T13 | NPN | BC 173C |
| T9 ÷ T11 | PNP | BC 415C |

SHEET N 8–12 CST1287 OFL
SHEET N 6–12 CST1278 VIB
SHEET N 4–12 CST1274 OFU
SHEET N 5 –12 CST1273 OPE
SHEET N 4–12 CST1274 OPR
SHEET N 11–12 CST1319 IAR
SHEET N 4–12 CST1289 KVD ACC
SHEET N 6–12 CST1278 M2
SHEET N 11–12 CST1274 CHR CHL

# 410CST1283

ROTARY SINPHONIC | SLOW FAST | LOWER MANUAL | UPPER TABS | UPPER PRESETS — ROTARY EFFECT

VIBRATO DELAY | LOWER MANUAL | UPPER TABS | UPPER PRESETS — VIBRATO - EFFECTS

# 410CST1272

SELECT. CL.6

SHEET N 11–12 CST1274 CHL
SHEET N 3–12 CST 1280 SUL
SHEET N 7 – 12 CST 1280 SLL
SHEET N 11–12 CST1274 CHR

| Model | Object: | Sheet No. 9 - 12 |
|---|---|---|
| X109 | ROTARY EFFECT | Date 25-9-81 |

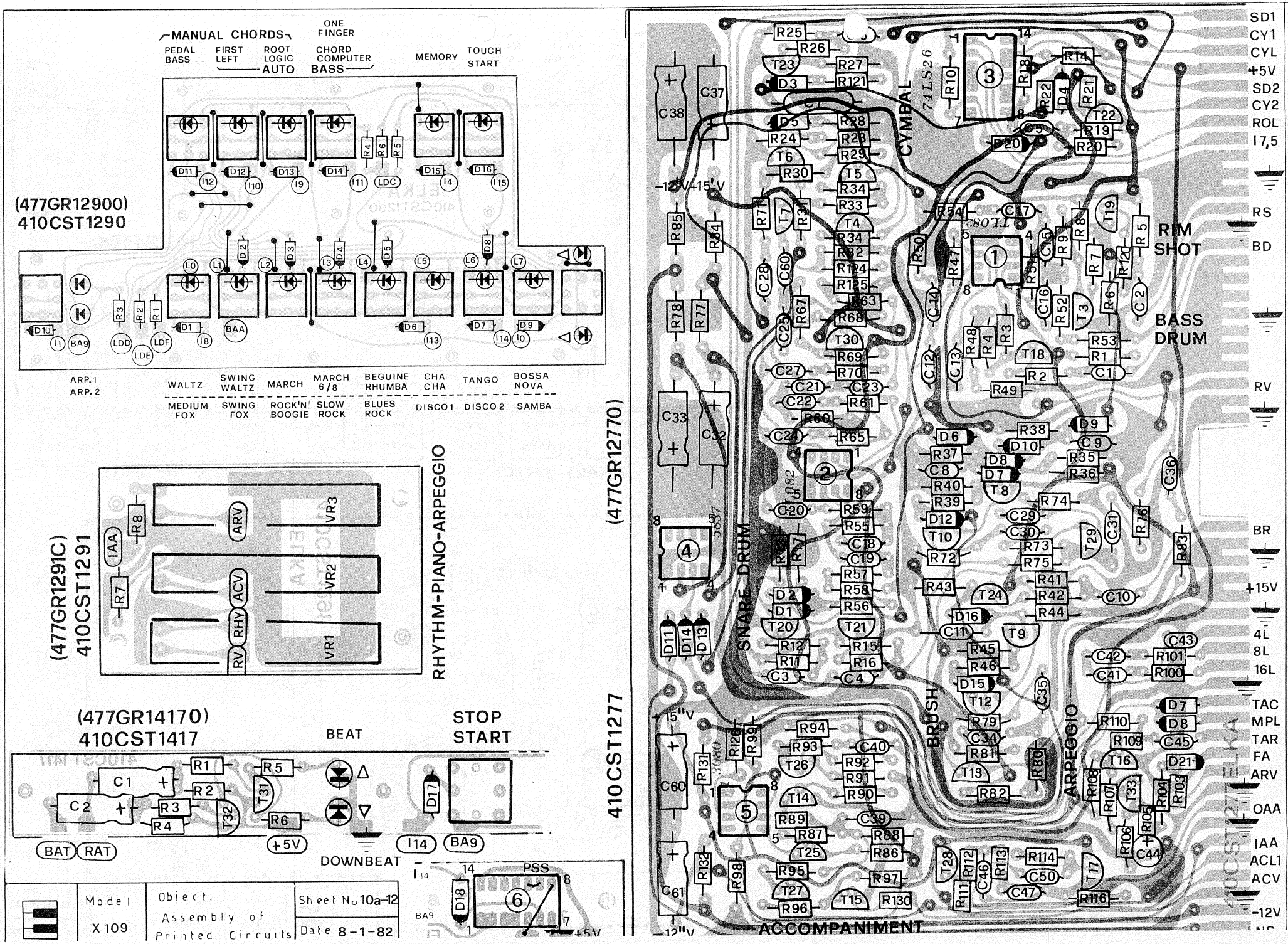
MANUAL CHORDS
ONE FINGER
PEDAL BASS
FIRST LEFT
ROOT LOGIC AUTO
CHORD COMPUTER BASS
MEMORY
TOUCH START
(477GR12900)
410CST1290
ARP.1
ARP.2
WALTZ
SWING WALTZ
MARCH
MARCH 6/8
BEGUINE RHUMBA
CHA CHA
TANGO
BOSSA NOVA
MEDIUM FOX
SWING FOX
ROCK'N' BOOGIE
SLOW ROCK
BLUES ROCK
DISCO1
DISCO2
SAMBA
(477GR1291C)
410CST1291
RHYTHM-PIANO-ARPEGGIO
(477GR14170)
410CST1417
BEAT
STOP START
DOWNBEAT
PSS
(477GR12770)
410CST1277
CYMBAL
SNARE DRUM
BRUSH
ARPEGGIO
RIM SHOT
BASS DRUM
ACCOMPANIMENT
SD1
CY1
CYL
+5V
SD2
CY2
ROL
17,5
RS
BD
RV
BR
+15V
4L
8L
16L
TAC
MPL
TAR
FA
ARV
OAA
IAA
ACL1
ACV
-12V
Model
X 109
Object:
Assembly of Printed Circuits
Sheet No 10a-12
Date 8-1-82

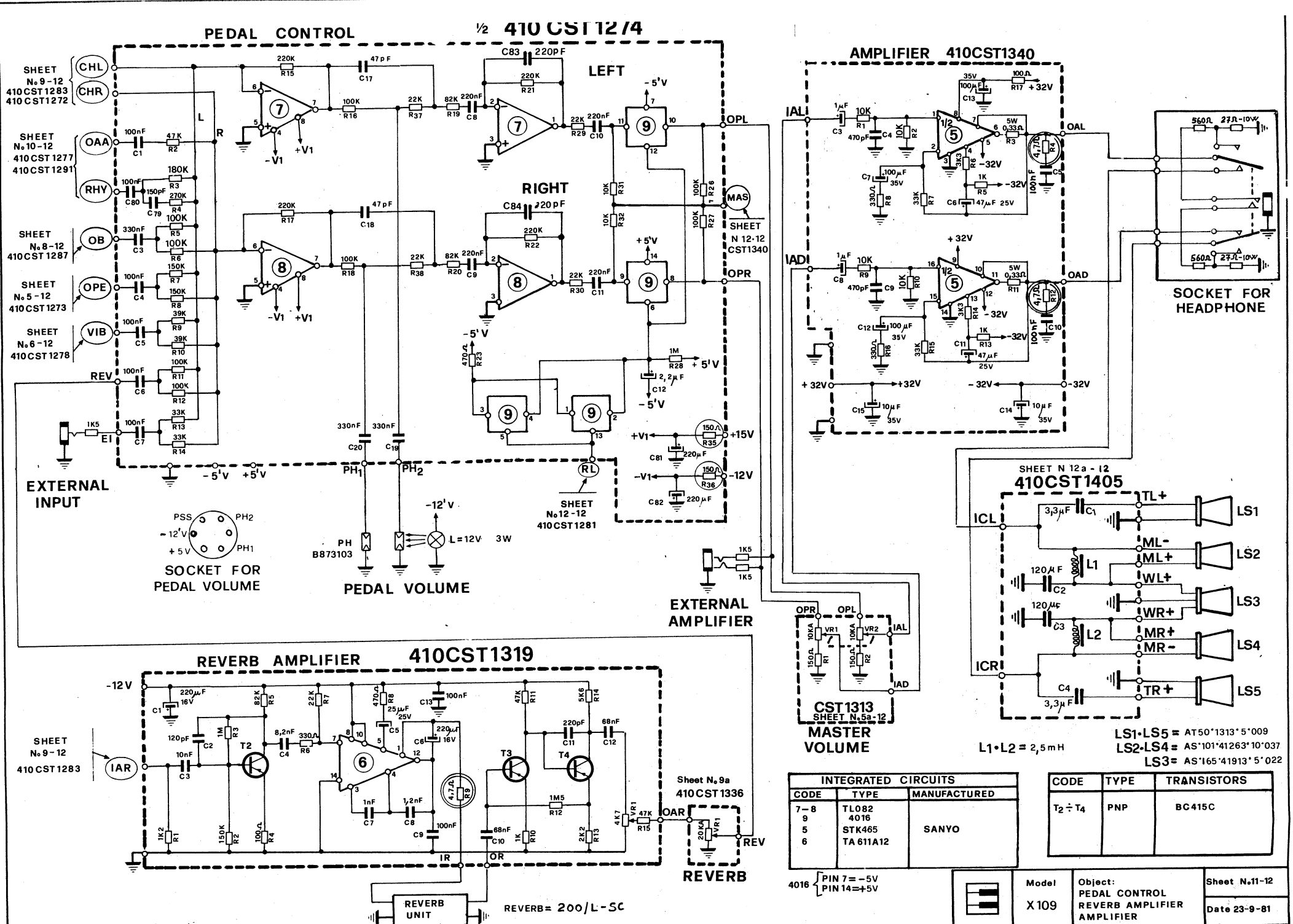


| INTEGRATED CIRCUITS | | |
|---|---|---|
| CODE | TYPE | MANUFACTURED |
| 7–8 | TL082 | SANYO |
| 9 | 4016 | |
| 5 | STK465 | |
| 6 | TA 611A12 | |

| CODE | TYPE | TRANSISTORS |
|---|---|---|
| $T_2 \div T_4$ | PNP | BC415C |

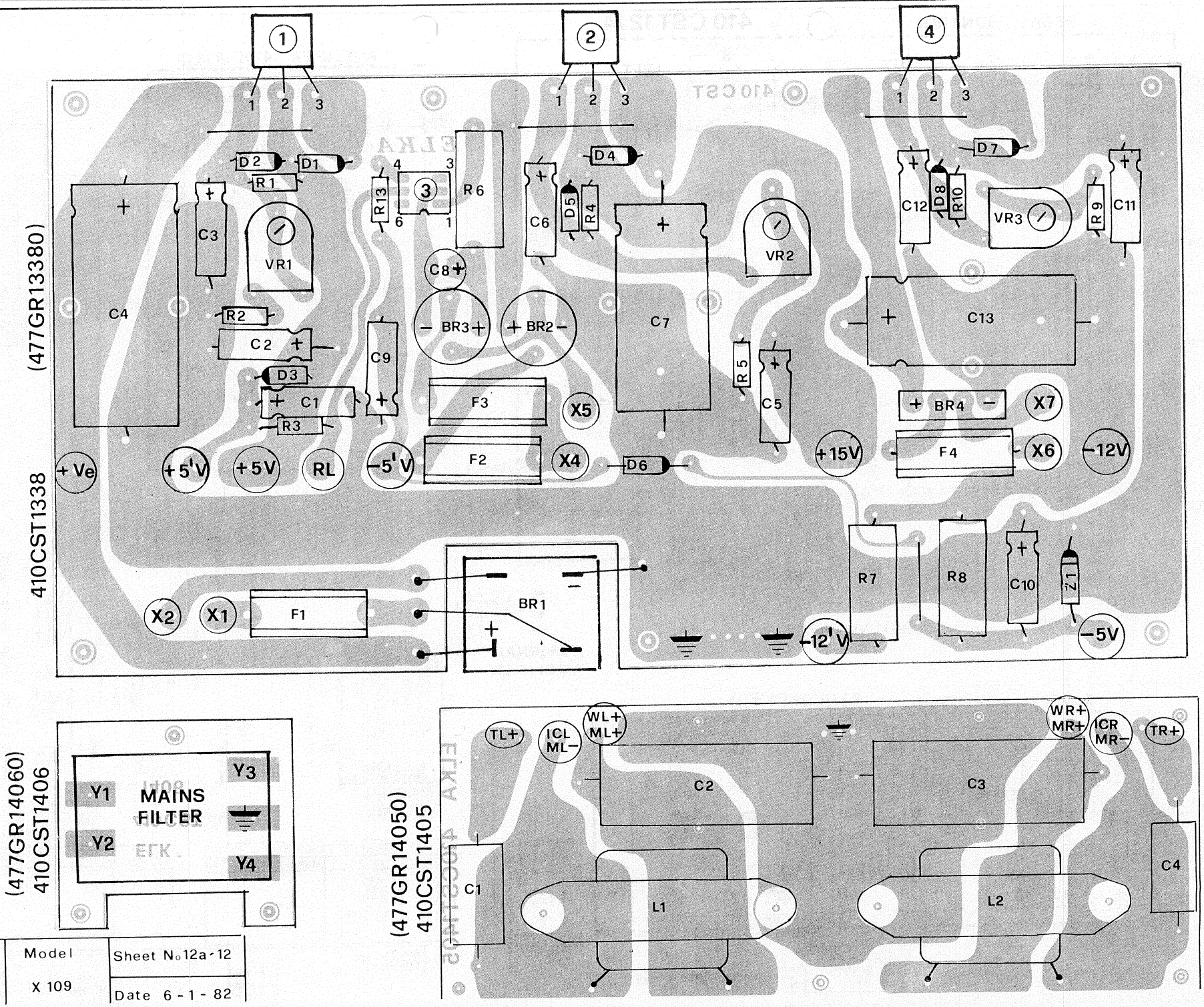


| | | |
|---|---|---|
| | Model | Sheet No. 12a-12 |
| | X 109 | Date 6-1-82 |

# POWER SUPPLY CST 1338

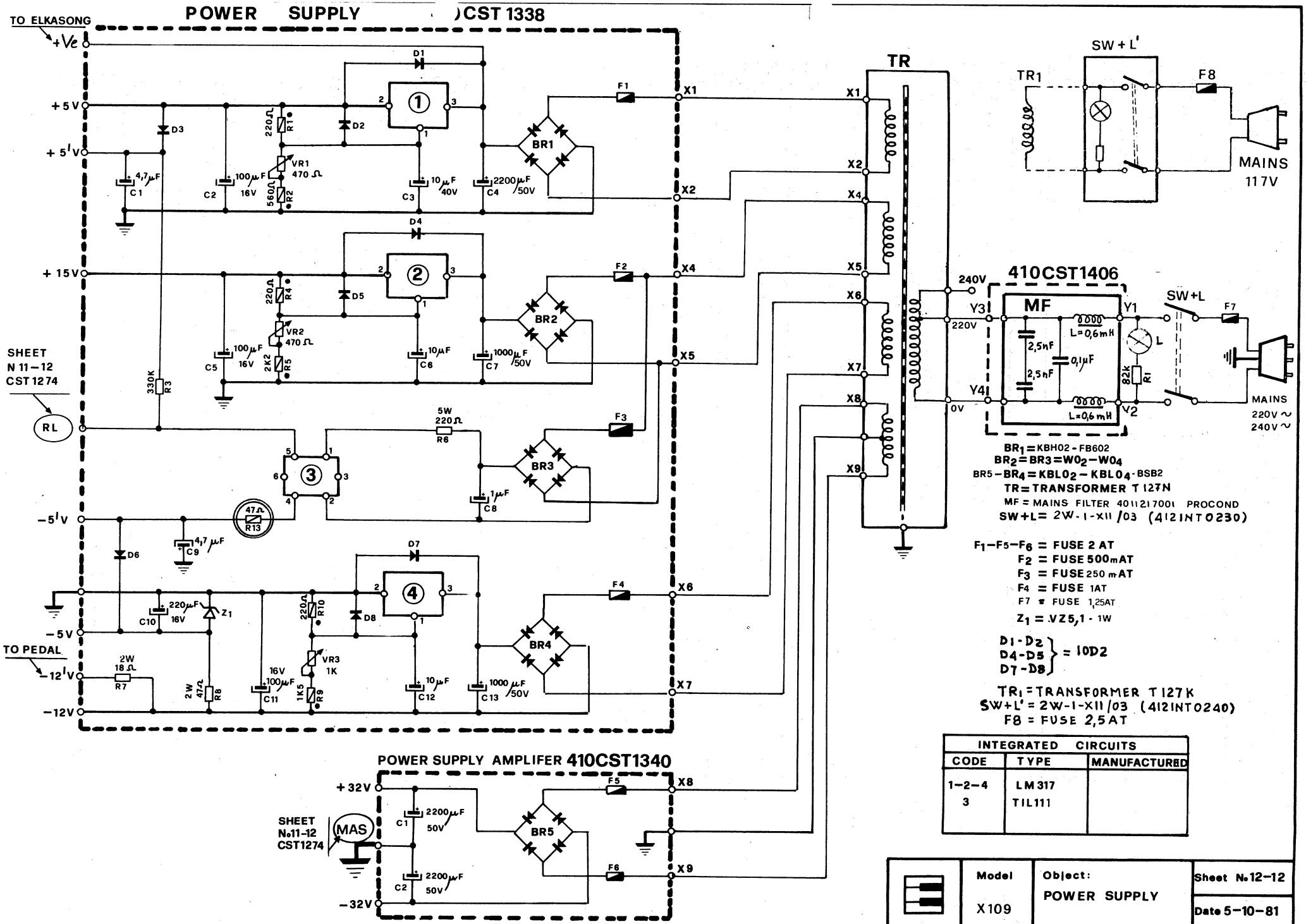


$BR_1$ = KBH02 - FB602
$BR_2$ = BR3 = $W0_2$ - $W0_4$
BR5 - $BR_4$ = $KBL0_2$ - $KBL0_4$ - BSB2
TR = TRANSFORMER T 127N
MF = MAINS FILTER 401121700I PROCOND
SW+L = 2W-1-X11/03 (412INT0230)

$F_1$-$F_5$-$F_6$ = FUSE 2 AT
$F_2$ = FUSE 500mAT
$F_3$ = FUSE 250mAT
$F_4$ = FUSE 1AT
F7 = FUSE 1,25AT
$Z_1$ = VZ5,1 - 1W

D1-D2
D4-D5
D7-D8
} = 10D2

$TR_1$ = TRANSFORMER T 127K
SW+L' = 2W-1-X11/03 (412INT0240)
F8 = FUSE 2,5AT

| INTEGRATED CIRCUITS | | |
|---|---|---|
| CODE | TYPE | MANUFACTURED |
| 1-2-4 | LM 317 | |
| 3 | TIL111 | |

| | Model | Object: | Sheet N°12-12 |
|---|---|---|---|
| | X109 | POWER SUPPLY | Date 5-10-81 |

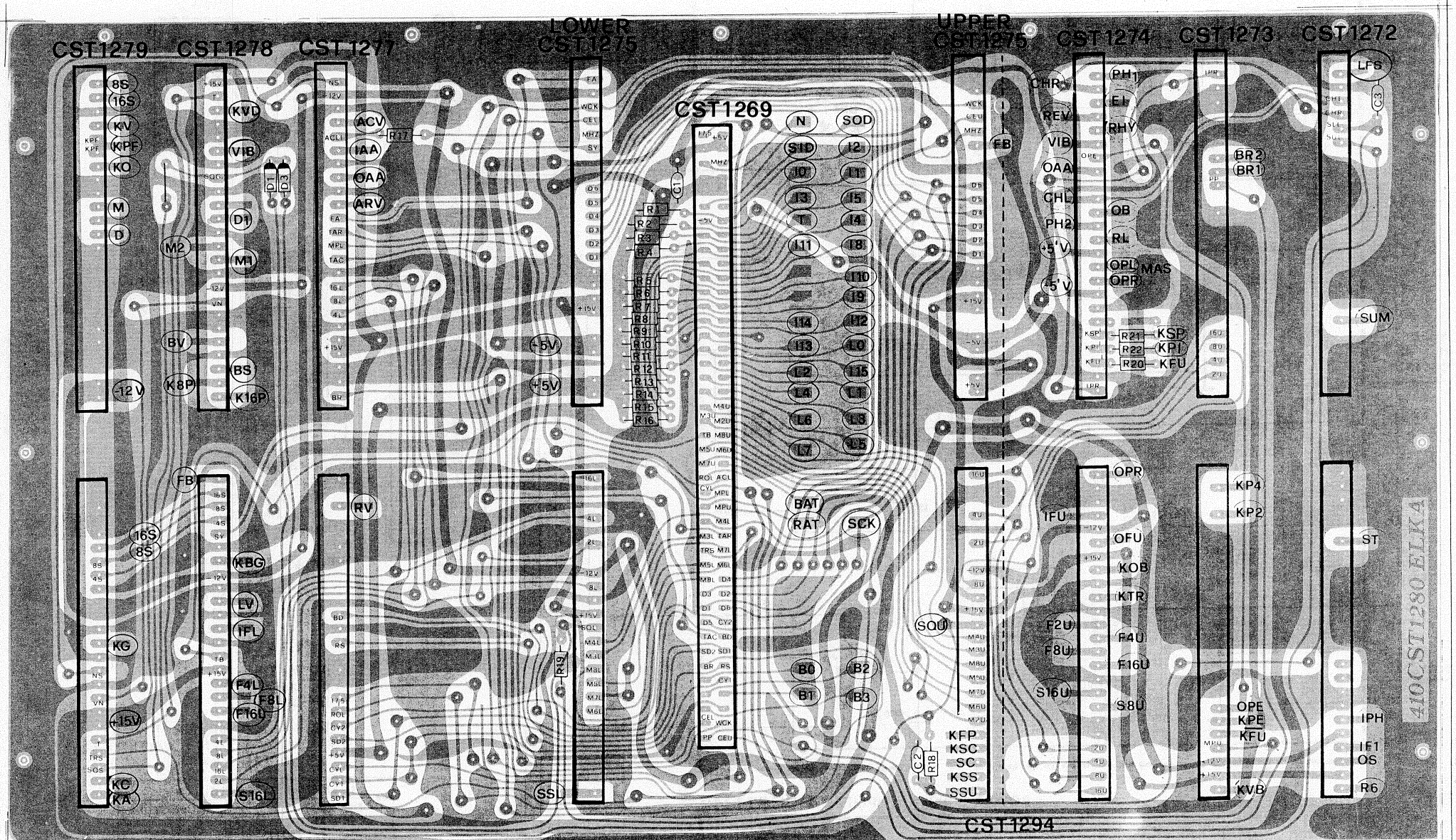


410CST1280

(477GR12801)

| | | | |
|---|---|---|---|
| | Model X109 | Object: Assembly of Printed Circuits | Sheet No 12b-12 |
| | | | Date 5-1-82 |